ELECTRONIC DETECTION AND DETERMINATION

OF CARBON MONOXIDE IN THE AIR

By

Wallace Samuel Kreisman

1949
AM
kre

BOSTON UNIVERSITY

GRADUATE SCHOOL

Thesis

ELECTRONIC DETECTION AND DETERMINATION OF CARBON MONOXIDE IN THE AIR

By

Wallace Samuel Kreisman

(A.B., Clark University, 1948)

submitted in partial fulfilment of the

requirements for the degree of

Master of Arts

1949

1949
Am
kre

Approved

by

First Reader . . . . . Royal M. Frye . . . . . .

Professor of Physics

Second Reader . . . . . Lucien B. Taylor . . . . . .

Professor of Physics

TOPICAL OUTLINE

TOPIC	PAGE
I. INTRODUCTION	1
A. The Problem	1
1. The Problem and its Importance	1
2. Objectives and Limitations of the Investigation	2
3. Theoretical Procedure	4
B. Background Information	7
1. Origin and Properties of Carbon Monoxide	7
2. Present Methods of Detection	9
II. ELECTROSTATIC ION CENTRIFUGE THEORY	12
A. Generalized Operation	12
1. The Ion Centrifuge Tube	12
2. Auxiliary Systems	15
3. The Detection and Determination Process	22
B. Design Factors	25
1. General Problems of Design	25
2. Specific Design Factors	26
C. Mathematical Theory	31
III. MAGNETIC ION CENTRIFUGE THEORY	53
A. Generalized Operation	53
1. Magnetic Field Considerations	53
2. The Magnetic Ion Centrifuge Tube	55
3. Auxiliary Systems	59
4. The Detection and Determination Process	64

TOPIC	PAGE
B. Mathematical Theory	66
1. The Steady Field Centrifuge	66
2. Solution of the Magnetic Field Problem	73
3. The Time Varying Field Centrifuge	78
IV. ENGINEERING DESIGN FOR AN EXPERIMENTAL MAGNETIC ION CENTRIFUGE GAS DETECTION SYSTEM	81
A. Individual Component Design	81
1. The Magnetic Circuit	81
2. The Ion Centrifuge Tube	97
3. Electric and Electronic Circuits	98
4. The High Vacuum and Gas Generating Systems	99
5. Overall System Assembly	101
V. SUMMARY AND CONCLUSIONS	103
A. Synopsis of Important Findings	103
1. Theoretical Considerations	103
2. Experimental Considerations	104
B. Recommendations for Further Study	104
ABSTRACT OF THE THESIS	106
BIBLIOGRAPHY	110

LIST OF ILLUSTRATIONS

FIGURES		PAGE
1.	Percentage Saturation of Haemoglobin with Carbon Monoxide as a Function of the Time	10
2.	Effects of Specific Carbon Monoxide Concentrations	10
3.	Electrostatic Ion Centrifuge Tube	14
4.	Electrostatic Ion Centrifuge Gas Detection System Block Diagram	16
5.	Experimental Gas Generating System	17
6.	Experimental High Vacuum System	20
7.	Electrostatic Ion Centrifuge Electronic Assembly Block Diagram	21
8.	Rotating Field Electronic Circuit	27
9.	Type B Radar Display	30
10.	Forces on a Positive Ion of the Electrostatic Ion Centrifuge	33
11.	Energy of a Positive Ion of the Electrostatic Ion Centrifuge	37
12.	Initial Conditions and Assumed Dimensions of the Electrostatic Ion Centrifuge	40
13.	Motion of a Positive Ion in the Electrostatic Ion Centrifuge--Detail	44
14.	Motion of a Positive Ion in the Electrostatic Ion Centrifuge--General	45
15.	Mechanical Analogue of the Electrostatic Ion Centrifuge	46
16.	Non-Uniform, Radially Symmetric Field Electrodes	51
17.	Magnetic Field Circuit for Steady Field Centrifuge	56
18.	Steady Field Magnetic Ion Centrifuge Tube	58
19.	Block Diagram of Magnetic Ion Centrifuge Gas Detection System	60

FIGURES PAGE

20. Electronic Circuits of the Steady Field Centrifuge 62

21. Release of a Positive Ion in a Non-Uniform Magnetic Field 69

22. Conical Pole Cap Magnetic Field Circuit 74

23. Assumed Construction of Conical and Parabaloidal Pole Caps 76

24. Experimental and Theoretical Parabolic Pole Cap Magnetic Fields 95

25. Variation of Parabolic Pole Cap Magnetic Field with Coil Current 96

26. Photograph of Experimental Laboratory Gas Detection System 102

TABLES

1. Approximate Solution by Steps of the Differential Equations of the Electrostatic Ion Centrifuge 42

LIST OF ENGINEERING SKETCHES

SKETCH		PAGE
1.	Magnetic Circuit Assembly	82
2.	Magnetic Shell	83
3.	Magnetic Shell Bracket	84
4.	Magnetic Shell Bolt and Nut	85
5.	Pole Piece Assembly	86
6.	Pole Piece Coil Form	87
7.	Coil Form Insulation	88
8.	Pole Piece Wire Lamination	89
9.	Pole Piece Bolt Sleeve	90
10.	Pole Piece Winding Data	91
11.	Pole Cap	92
12.	Pole Cap Bolt	93

I. INTRODUCTION

A. The Problem

1. The Problem and its Importance

During the winder of 1947, almost every daily newspaper brought new stories of asphyxiation or near-asphyxiation in residential dwellings of Boston. The winter being unusually severe, people kept their homes tightly sealed and spent most of their time indoors. Under these conditions, the deadly carbon monoxide molecule, so plentiful in city gas and automobile exhaust, wrought its havoc. Faulty stoves, old porous plumbing, seepage from buried gas mains, and accidental opening of gas cocks all contributed to increase the death toll. Occasional reports of manhole covers being blown high into the air testified to the explosive violence of carbon monoxide concentrations, a phenomenon well known and guarded against by the mine worker.

In consideration of the foregoing facts, there can be no question concerning the need for some device which can detect carbon monoxide quickly, before it insiduously numbs and kills. Speed and dependability are the prime requisites of any poison gas detector. Since both speed and dependability are characteristics of Electronics, it is in this new branch of science that a solution will be sought.

Because of the need for a simple and dependable gas alarm, the investigator has studied ways and means of physical gas detection. It was found that most methods of analyzing gases are laboratory procedures, unsuitable for rapid detection. By a series of trial and error developments, the writer has attempted to devise a system which will lend itself to rapid gas analysis outside of the laboratory.

If an electronic device can be created which will detect and measure the relative percentage of carbon monoxide in the air, its use

can certainly be extended to the detection and measurement of other gases. This is so because an electronic gas detector would detect and measure a gas on the basis of its physical properties rather than on its chemical reactions. Whereas a particular chemical test might be satisfactory for one gas, it would probably be useless in the detection of other gases. In the specific instance of air, where there are a number of gases coexistent, most procedures of analysis require the separation of the mixture into its constituent gases before individual tests are applied. The electronic devices to be discussed in this thesis accomplish the separation of gas mixtures as a part of their operation. They work, literally, by measuring the fundamental composition of gas mixtures.

2. Objectives and Limitations of the Investigation

The principal purpose of this thesis is to present a fundamental method of electronic gas analysis that is directly applicable to the detection and quantitative determination of carbon monoxide in the air. The fundamental method of gas analysis to be presented herein is that of separating the constituent molecules and atoms of the atmosphere on the basis of their mass and measuring the concentration of identical molecules and atoms. A theoretical study will be made of two electronic systems which utilize this fundamental method. Both of these systems employ special electronic tubes so designed as to achieve molecular separation by a centrifuge-like action--much as a cream separator or chemical centrifuge. These special tubes will hereafter be referred to as Ion Centrifuge tubes. Air to be tested for carbon monoxide will be admitted into the Ion Centrifuge tube which will then be sealed and evacuated to a low pressure by a vacuum pump. An electrode "Ion Gun" structure within the tube will bombard the low pressure air with electrons, ionizing carbon monoxide and other molecules and leaving them positively

charged. These charged ions will be whirled about in either an electrostatic or magnetic field specially designed to cause the ions to rotate in circles. The radii of these circles will be functions of the ions' masses. A pickup device within the tube will be employed to give an indication of the varieties and concentrations of ions.

In its ultimate, perfected form, the Ion Centrifuge will give a continuous indication of the constituents of the atmosphere. The usefulness of such a gas analyzer in the chemistry laboratory is obvious. Poison gases other than carbon monoxide may also be detected by the Ion Centrifuge and the device should have military significance as a weapon of defense.

Because of the rather broad nature of the subject matter of this thesis, it was impossible to consider all of the ramifications and finer points of electronic design. Certain assumptions were made and certain limitations were imposed to narrow and concentrate attention on basic fundamentals. The present investigation was limited in scope by confining the use of the Ion Centrifuge to the detection and determination of carbon monoxide in the air. This was clearly an artificial limitation. The principal objective was to create and design a fundamental process for rapidly distinguishing one gas from others. When this was accomplished, the process could very well be generalized and extended to greater usefulness.

The complicated theory that deals with the rate of ionization and deionization of a gas was not considered in this investigation. It was assumed that a certain number of molecules would ionize when bombarded by electrons of sufficient energy, and that these ions would exist long enough for measurements to be made.

At this point it might be mentioned that carbon monoxide is not the only molecule having a relative mass of 28 units. Ethylene, C_2H_4, and nitrogen, N_2, are two common molecules which have the same mass. Fortunately, the ionizing potentials of the three molecules are different. It was assumed that ionization could be made selective enough to differentiate molecules of identical mass. In the specific case of ethylene, carbon monoxide, and nitrogen, the ionizing potentials are 12.2 volts, 14.1 volts, and 15.51 volts respectively.[1] To be strictly accurate, ethylene molecules should be ionized first and their concentration noted. Next, the ionizing voltage should be increased to ionize carbon monoxide, and the concentration indication should be corrected for the presence of ethylene. In a typical, manufactured illuminating gas roughly 13 per cent is ethylene and 30 per cent is carbon monoxide. For a home gas alarm no distinction need really be made between the two since the presence of ethylene and carbon monoxide go hand in hand.

Space charge effects were neglected in the development of the two Ion Centrifuges. Stray electrons should not interfere with ion current measurements because of their small mass and opposite electrical charge. It was further assumed that all positive ions would have unit positive charge of 4.80×10^{-10} e.s.u.

3. Theoretical Procedure

The process of separating charged particles on the basis of their mass has already been accomplished in the mass spectrograph. The purpose of the mass spectrograph, however, is that of laboratory determination of charge and pass of fundamental nuclear particles. The purpose

---

[1] Handbook of Chemistry and Physics. (Cleveland, Ohio: Chemical Rubber Publishing Co., 1943), pp 1864-5.

of the Ion Centrifuges is to apply the knowledge possessed today concerning molecular and atomic particles to the rapid qualitative and quantitative analysis of air.

Throughout all of the mathematical formulation of the Ion Centrifuges, the practicability of their physical construction was ever kept in mind. In other words, the engineering point of view was adopted. As stated previously, the Ion Centrifuges were developed by a sort of trial and error process. The Electrostatic Ion Centrifuge was conceived and developed without a thorough knowledge of the action of a rotating field (electric) on charged particles. Actually, the impossible was attempted, for, according to L. M. Myers, "It is . . . not possible to separate particles of different mass and charge with the aid of an electrostatic field alone, provided the particles start off in the field with zero energy."[2] In spite of this, the mistakes made in developing this first centrifuge were valuable in designing the Magnetic Ion Centrifuge.

While designing the Electrostatic Ion Centrifuge, several auxiliary problems arose. The first of these was the solution of the non-linear differential equations of the Electrostatic Ion Centrifuge. This was first accomplished by a tedious step-by-step approximation method and the compilation of Table I. After this had been done, it was discovered that the introduction of a viscosity coefficient transformed the non-linear equations into linear equations which could be solved exactly. Another problem which arose was the solution of an electrostatic potential configuration. This was considered at some length but could not be solved mathematically.

---

[2] L. M. Myers, Electron Optics Theoretical and Practical. (New York: D. Van Nostrand Co., Inc., 1939), p. 100.

The Magnetic Ion Centrifuge was roughly patterned after D. W. Kerst's Magnetic Induction Accelerator which later became the Betatron.[3] The theory of this centrifuge is straightforward and easily understood, and the mechanical design of the apparatus is simple, with the exception of the magnetic field pole caps and the "Ion Gun" structure of the Ion Centrifuge tube. A distinction is made between a simple, steady-field centrifuge and a more complicated varying-field centrifuge that utilizes the principle of pulsed injection of ions.

In the design of both centrifuge tubes, attention is focused on the overall, operational aspects of the system. Auxiliary vacuum tube circuits and apparatus are carefully considered. The ultimate objective of design is to have as simple, compact, and foolproof a unit as possible. This objective cannot, of course, be reached at "one sitting" as it were, but at least the trend can be initiated.

During the mathematical formulation of the Magnetic Ion Centrifuge, it was discovered that a particular type of radial magnetic field had to be created. Through the use of a mathematical technique of infinitely thin cylindrical sections, it was possible to calculate the shape of pole pieces to give this field. As far as is known, this was the first time that this particular technique had been used. Experimental results have verified the validity of the mathematics and broach the possibility of refining the enlarging the technique as a contribution to magnetic field theory.

Since the validity and usefulness of any theoretically feasable device is best established by constructing a working model, it seemed wise

---

[3] D. W. Kerst, "Acceleration of Electrons by Magnetic Induction," The Physical Review, 60:47-58, July, 1941.

in the case of the Magnetic Ion Centrifuge to construct a small model and test its operation. At the time this thesis was written, a working model had been partly built according to the engineering sketches that appear in Section IV. The magnetic circuit was completed and strikingly validated the unique mathematical solution of the magnetic field problem. When the working model has been completed and tested, the results will be written up as a supplement to the thesis.

B. Background Information

1. Origin and Properties of Carbon Monoxide

Before proceeding with the theory of the Ion Centrifuges, it may be well to examine the origin and physical properties of carbon monoxide:

"Occurrence and Uses:

In the manufacture of acetylene, calcium carbide, cores (founding), felt hats, incandescent lamp filaments; in baking, blacksmithing, brass founding, cable splicing, calico printing, charcoal burning, charging (zinc smelting), chimney sweeping, copper smelting, enamelling, incandescent lamp finishing, work with bisque kilns, coke ovens, coal tar plants, boiler rooms and internal combustion engines. Also found whenever incomplete combustion occurs."[4]

In the laboratory, carbon monoxide may be generated by one of two methods. The first method is to decompose formic or oxalic acid by applying heat. The second method is to dehydrate formic or oxalic acid by the addition of sulfuric acid.

---

[4] Joseph B. Ficklen, Manual of Industrial Health Hazards. (Hartford, Conn.: Service to Industry, Box 133, West Hartford, Conn., 1940), p. 66.

Carbon monoxide is a very toxic gas. "One part in about 100,000 of air produces illness, and one part in about 750 leads to death in a short time."[5] Since the gas is colorless and odorless by itself, it cannot be detected by sight or smell. In the presence of sunlight, it reacts with chlorine to form the extremely poisonous phosgene.

"Carbon monoxide combines with the haemoglobin of the red blood corpuscles, and thus prevents their taking up oxygen. Both the reaction of oxygen and of carbon monoxide with haemoglobin are reversible processes, but the compound formed by the carbon monoxide is the more stable. Consequently, a small amount of carbon monoxide can completely drive the oxygen from the blood; on the other hand, if carbon monoxide-free air is inhaled, the carbon monoxide is driven out. For this reason persons poisoned by carbon monoxide should be taken into fresh air and given artificial respiration if necessary."[6]

The clinical symptomatology of carbon monoxide in man may be divided into two stages:

"Stage 1. Tightness across forehead, headache (frontal and basal), throbbing in temples, weariness, weakness, dizziness, nausea, vomiting, loss of strength and muscular control, increased rate or respiration, collapse.

Stage 2. Increased rate of respiration, loss of muscular control, slowing of pulse, death."[7]

---

[5] H. I. Schlesinger, General Chemistry. (New York: Longmans, Greene and Co., 1938), p. 558.

[6] Loc. cit.

[7] Ficklen, op. cit., p. 67.

In Figure 1 the graph shows the percentage saturation of haemoglobin with carbon monoxide as a function of the time and percentage of carbon monoxide in the air. Figure 2 lists the effects of specific concentrations. There are differing standards of safe maximum concentrations of carbon monoxide, but 100 parts per million is considered a safe upper limit by the United States Public Health Service.[8] An effective gas alarm must, therefore, be able to detect concentrations as low as one part in 10,000.

Other significant properties of carbon monoxide are:

"Molecular weight	28
Weight of pure gas	1250 milligrams/liter
Relative density of gas to air	0.967
Freezing point	-205.7° C.
Boiling point	-190° C.
Solubility in cold water	-3.5 cc/100 grams
Soluble in alcohol	
Minimum explosive limit in air	12.5 % by volume"[9]

2. Present Methods of Detection

Any gas may be detected either by its physical or chemical properties. The Interferometer and Spectroscope are the most accurate detectors of almost every fundamental molecular structure. The Spectroscope is often used in post mortems to verify carbon monoxide deaths, yet both these delicate instruments are confined to the laboratory and require photographic film processing.[10] Methods of detection involving liquefaction and freezing and boiling point tests properly belong in the laboratory.

---

[8] Ficklen, op. cit., p. 67.

[9] Ficklen, loc. cit.

[10] At the other extreme of scientific accuracy, mine workers often use canaries, mice, and other small animals to give warning of carbon monoxide.

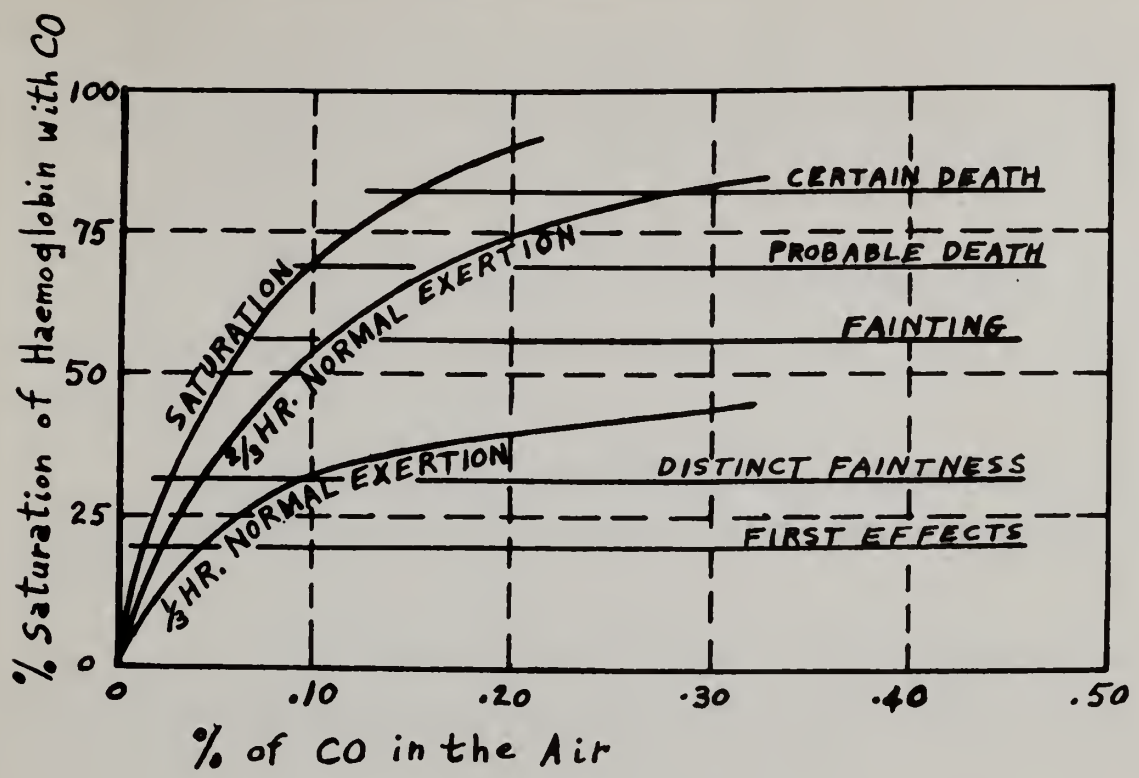

FIG. 1. Percentage Saturation of Haemoglobin with Carbon Monoxide as a Function of the Time

TIME IN HOURS X CO CONCENTRATION	PHYSIOLOGICAL EFFECT
.03	None
.06	Just Perceptible
.09	Headache and Nausea
.15	Dangerous to Life

FIG. 2. Effects of Specific Carbon Monoxide Concentrations

Carbon monoxide may be dissolved in alcohol or a cuprous chloride solution containing ammonia and thus change the electrical conductivity of the solvent. However, other gases may produce the same results and the method is uncertain.

There are many chemical methods in use today for the detection and measurement of carbon monoxide. Five of the most common of these are listed below:

a. The pyrotannic acid method measures concentrations in the range of 100 to 2000 parts per million. It is strictly a laboratory method.

b. The activated iodine pentoxide detector measures concentrations from 1000 parts per million on up. This method depends on color matching and is not suitable for continuous detection.

c. The ampoule-type carbon monoxide detector measures concentrations from 200 parts per million on up at temperatures above 50° Fahrenheit. The method does not work well at temperatures below 50° Fahrenheit and also requires color matching.

d. Methods which convert carbon monoxide to carbon dioxide and measure the percentage of carbon dioxide formed. The most practical of these methods allows the carbon dioxide to be absorbed in an alkaline solution. The change in the electrical conductivity of the solution indicates the amount absorbed.

e. The hopcalite catalyst method is by far the best method in use today. Carbon monoxide is made to react with a catalyst, hopcalite. Heat is liberated in the reaction, and the temperature of the catalyst is increased. If air is brought into contact with the catalyst at a constant rate, the temperature is proportional to the carbon monoxide in the air.

Thermocouples are used to transform temperatures to electrical potentials which are consequently read on a calibrated meter. It is necessary to remove moisture from the air and keep the catalyst at a constant temperature. In a practical device of this sort, air is drawn into the apparatus by a motor-driven pump and dried by an electrical heater. The equipment is said to be accurate to 50 parts per million and sounds a warning at a carbon monoxide concentration of 200 parts per million.[11]

As far as is known, no electronic mass spectrograph technique has been applied to rapid detection and determination of gases. In this connection, there remains an extensive field for investigation. The importance of the problem, as stated earlier, has prompted the writer to attempt the design of an electronic gas alarm.

II. ELECTROSTATIC ION CENTRIFUGE THEORY

A. Generalized Operation

1. The Ion Centrifuge Tube

By way of introduction, it must be made clear at the outset that the electrostatic Ion Centrifuge was an entirely fictitious electron tube. No attempt was made to construct such a tube and even its engineering design was never carried to completion. Early in the theoretical formulation of the centrifuge, it became apparent that the basic assumptions of operation were false. Nevertheless, the design problems that arose were interesting and the overall operational aspects of an electronic gas analyzer could be studied in relationship to this hypothetical tube. For these reasons, a complete gas determination system was theoretically

---

[11] L. B. Berger and H. H. Schrenk, "Methods for the Detection and Determination of Carbon Monoxide," U. S. Dept. of the Interior Bureau of Mines Technical Paper 582. (Washington, D. C.: U. S. Government Printing Office, 1938.)

built about this electrostatic tube.

The electrostatic Ion Centrifuge tube was a small, flat, cylindrical, glass tube about five inches in diameter and one inch high. Gas intake and vacuum exhaust ports were located on the rim diametrically opposite one another. In the very center of the tube was located the heater type of cathode. Close to and surrounding the cathode cylinder was a conventional wire grid known as the ionizing grid. Outside the ionizing grid was another wire grid, the accelerating grid. Near the circumference of the tube were located the four rotating field plates arranged as the four sides of a square within the periphery of the tube. On the top and bottom of the tube were two annular electrodes, concentric to the cathode and symmetrical about a plane dividing the upper and lower halves of the tube. Reference to Figure 3 will make the electrode arrangement clearer. The inner rim of the centrifuge was metallized and electrically grounded to drain off stray charges.

The electrodes in the Ion Centrifuge were meant to serve two main purposes. The cathode and its surrounding grids were used to create positive ions and shoot them out radially from the center of the tube. The four rotating field plates and the annular electrodes produced a rotating and a stationary electrostatic field respectively. These fields were designed to move the positive ions in circular orbits. The purpose of the rotating field was to provide a component of force tangent to the orbits of the ions and thus keep them rotating. The radially symmetric, stationary field produced by the four annular electrodes was to act as the electrical equivalent of a spring to balance the centrifugal force developed by the rotating ions. The rotating ions, approaching and receeding from the pickup loop, were to induce an alternating voltage in that electrode for measurement purposes.

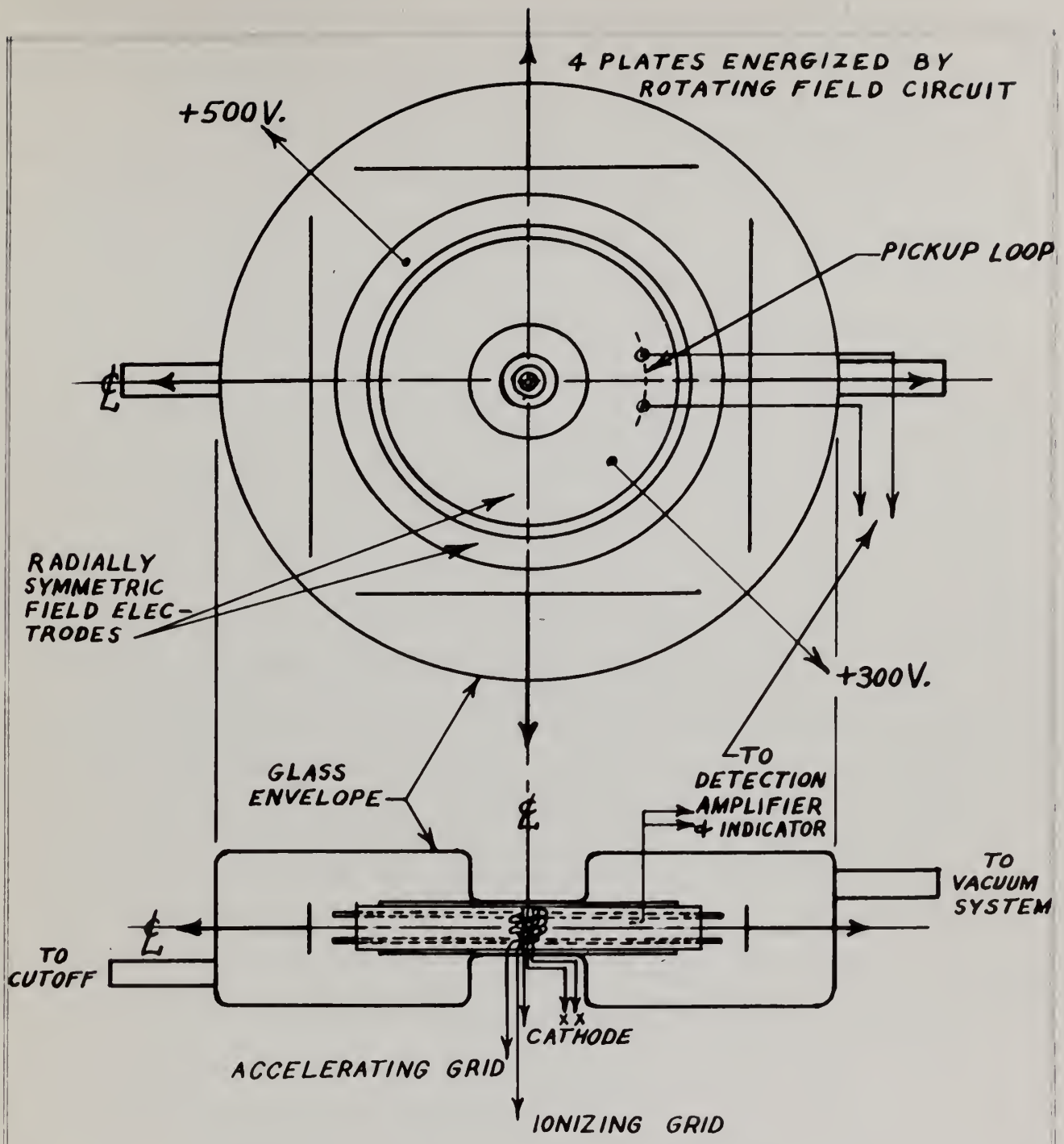

FIG. 3. Electrostatic Ion Centrifuge Tube

2. Auxiliary Systems

Reference to Figure 4 will show the relationship of the Ion Centrifuge to other components of a complete electronic gas detection system. In addition to the centrifuge tube, three other units were essential for experimental gas detection and determination. Of these three units or component assemblies, two were permanent components of an operational system. The third, the gas generating system, was a temporary necessity. The accuracy with which the Ion Centrifuge indicated quantitative gas data was strictly dependent on the accuracy with which it had been calibrated. The purpose of the gas generating system was to generate pure carbon monoxide and mix it in any desired proportion with air, oxygen, nitrogen, ethylene, or any other comparison gas. In this way, all sorts of known gas mixtures were available for calibration work. The two permanent component assemblies, the high vacuum system and the electronic assembly, are diagrammed in Figures 6 and 7 respectively. It should be noted that the high vacuum system was of the fixed, laboratory variety. Any commercial electronic gas analyzer would have a portable, compact, metal high vacuum unit. One of the foremost problems of electronic gas analysis actually turned out to be that of simplifying high vacuum apparatus. The electronic assembly for any commercial analyzer would be mounted in a single housing with all controls and meters on the front panel. For an experimental laboratory model, however, this was not necessary.

The gas generating system that was actually constructed for experimental work is shown in Figure 5. The entire apparatus was made of pyrex. Standard taper, oblique-bore, vacuum stopcocks and standard taper joints were utilized as shown. Special high vacuum grease was used to seal all stopcocks and joints. The manometer used to measure the composition of gas mixtures was of the closed-end type, a very accurate and

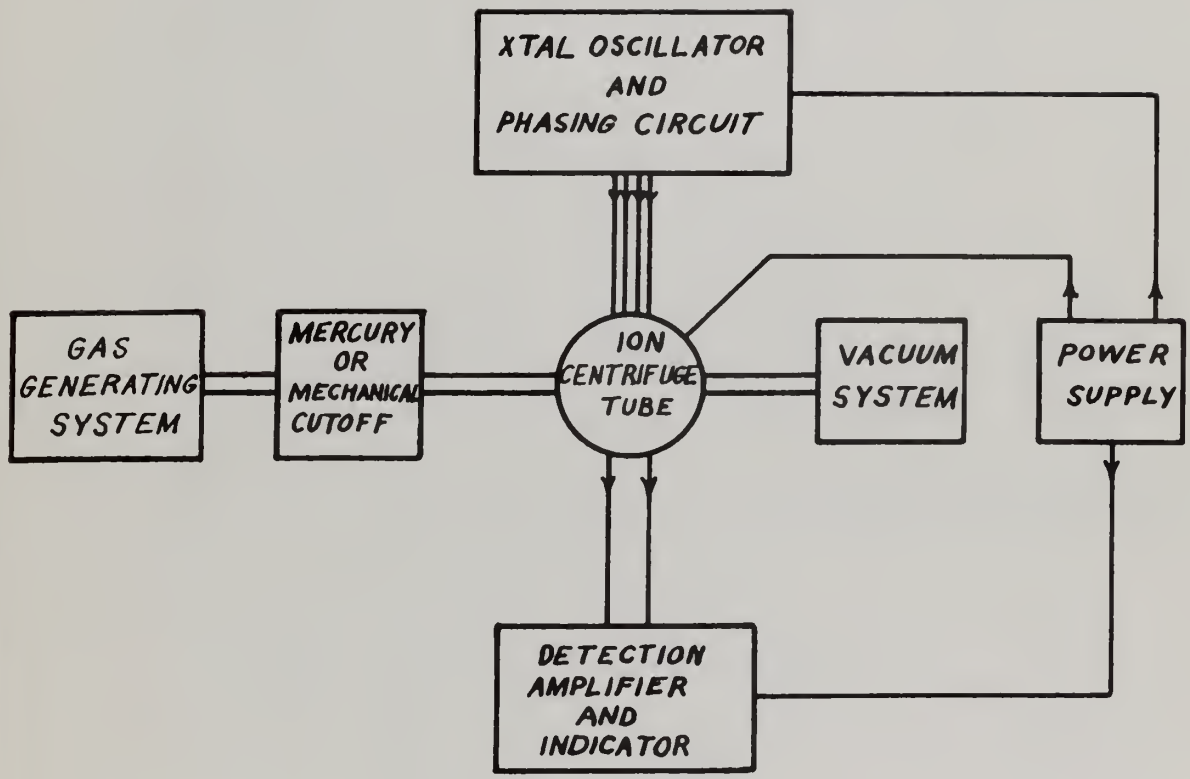

FIG. 4. Electrostatic Ion Centrifuge Gas Detection System Block Diagram

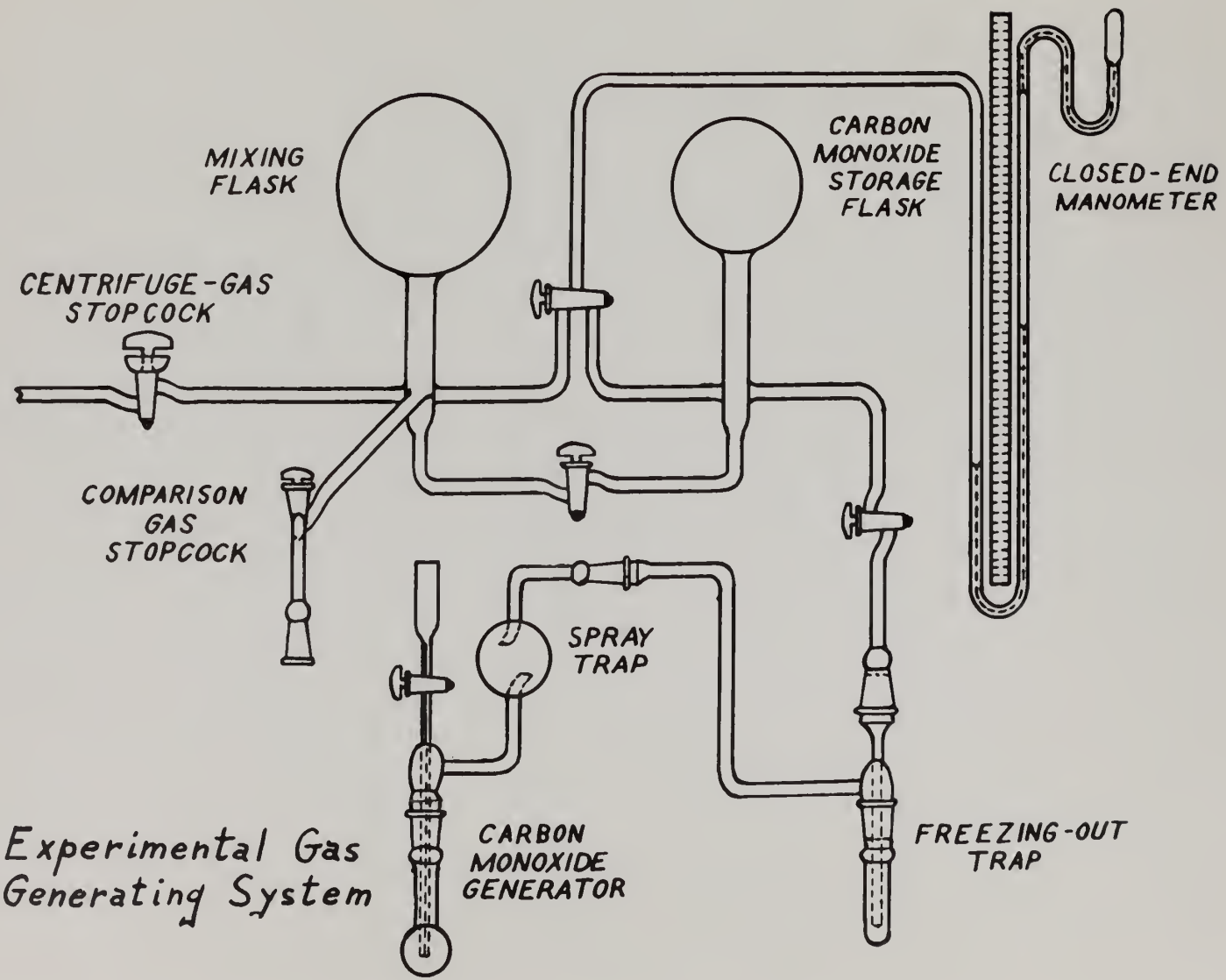

FIG. 5 Experimental Gas Generating System

reliable instrument. The carbon monoxide generator allowed sulfuric acid to be added drop by drop to formic acid thus generating carbon monoxide and water vapor. The freezing-out trap removed the water vapor allowing pure carbon monoxide to fill the storage flask. The storage flask could be filled to an appreciable pressure, after which the generator could be shut down. In this way, it was possible to create enough carbon monoxide for many weeks of experimental work. Carbon monoxide could be added slowly to the mixing flask to any desired pressure as indicated by the manometer. At the same time, air or oxygen or any other "comparison" gas could be added to the mixing flask through the comparison gas stopcock. There was then available for measurement over one liter of a sample gas mixture of known composition. This mixture was added slowly to the centrifuge tube through the centrifuge-gas high vacuum stopcock to any desired pressure as indicated by the McLeod Gauge of the high vacuum system.

The high vacuum system that was used for experimental electronic gas analysis was a rather complicated affair. It was made almost entirely of pyrex and utilized a number of different devices to create, preserve, control, and measure the high vacuum attained. Of greatest importance were the vacuum pumps. Since the average mechanical vacuum pump would barely evacuate a "tight" system to a pressure of 10^{-3} millimeters of mercury, it was necessary to use an additional pump of different design to work to pressures below this value. A mercury diffusion pump proved to be the best choice for this job. It was simple, rugged, relatively inexpensive, and very reliable. The use of a mercury pump, however, immediately made it necessary to have a small electric heater with adequate current control, a source of cooling water, and a mercury freezing-out trap to prevent

mercury vapor from entering the Ion Centrifuge and gas generating system. In addition to the vacuum equipment mentioned, it was also necessary to have several vacuum stopcocks in the system so that any desired pressure could be maintained for long periods of time, and so that the vacuum could be quickly removed if desired. Of course, there had to be some means of measuring the degree of vacuum. Two instruments commonly used for this purpose were the McLeod Guage and the Ionization Guage. It was advantageous to use both; the Ionization Guage for continuous vacuum indication, and the McLeod Guage to check the Ionization Guage periodically. Also, since the vacuum system was chiefly glass tubing, there had to be provided a means for sealing the glass to the metal centrifuge tube. And last, but very important, there had to be available a rigid "vacuum rack" consisting of a grid-like pipe structure for mounting the components of the system in a vibration-free, strain-free manner.

The electronic assembly of the electrostatic Ion Centrifuge, like the tube itself, was never constructed, nor was its engineering design completed. In spite of this, the design and development of the electronic assembly was entirely feasible and offered few problems. An outline of such an assembly will now be given:

The electrostatic Ion Centrifuge tube required different operating voltages as listed below.

a. 2 to 6 volts d.c. filament heater voltage

b. 5 to 50 volts variable d.c. ionizing grid voltage

c. -500 volts d.c. for the accelerating grid

d. 300 and 500 volts d.c. for the stationary, radial field electrodes

e. Four 0 to 1000 volt variable a.c. phase quadrature voltages of equal magnitude for the rotating electrostatic field.

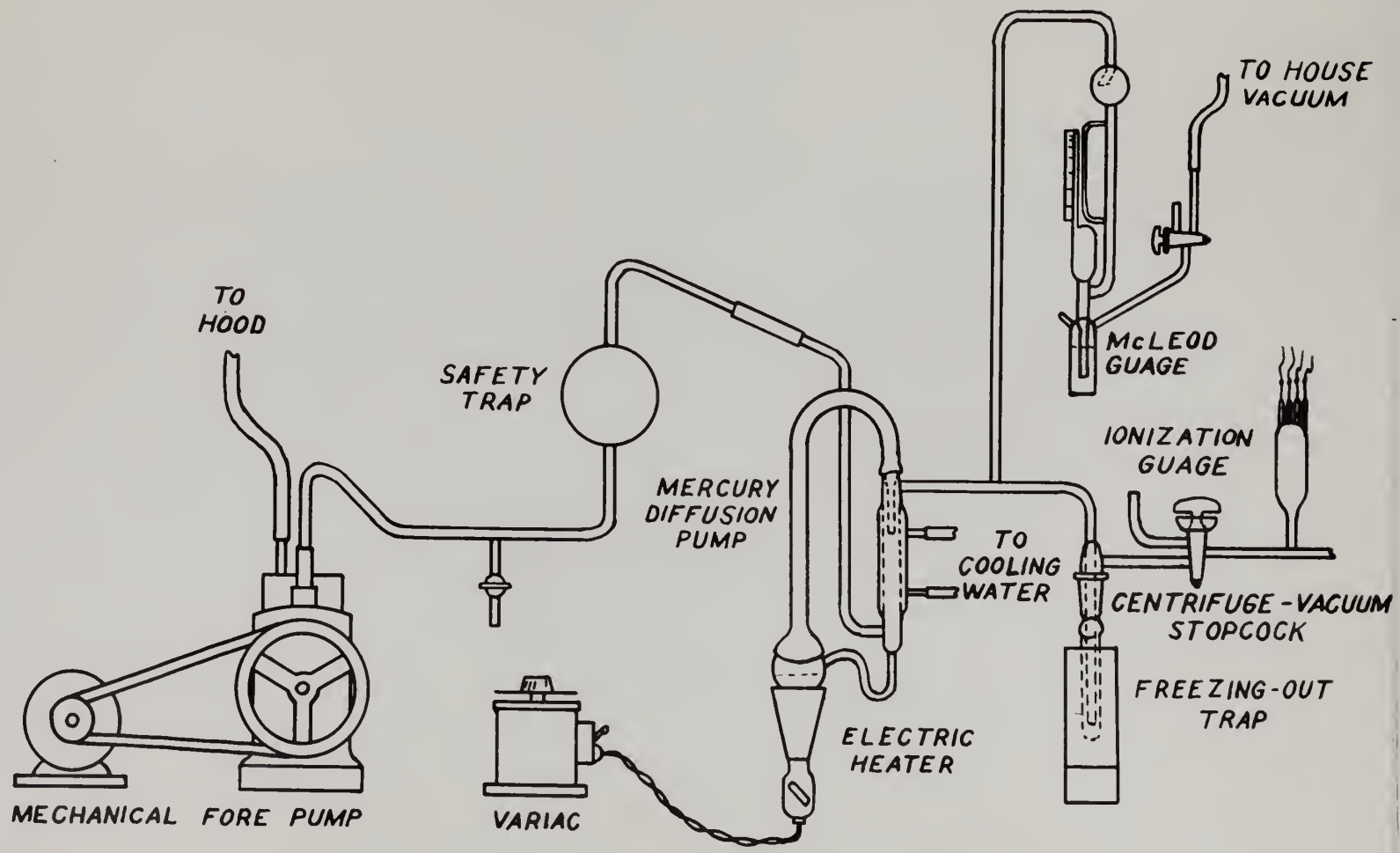

FIG. 6. Experimental High Vacuum System

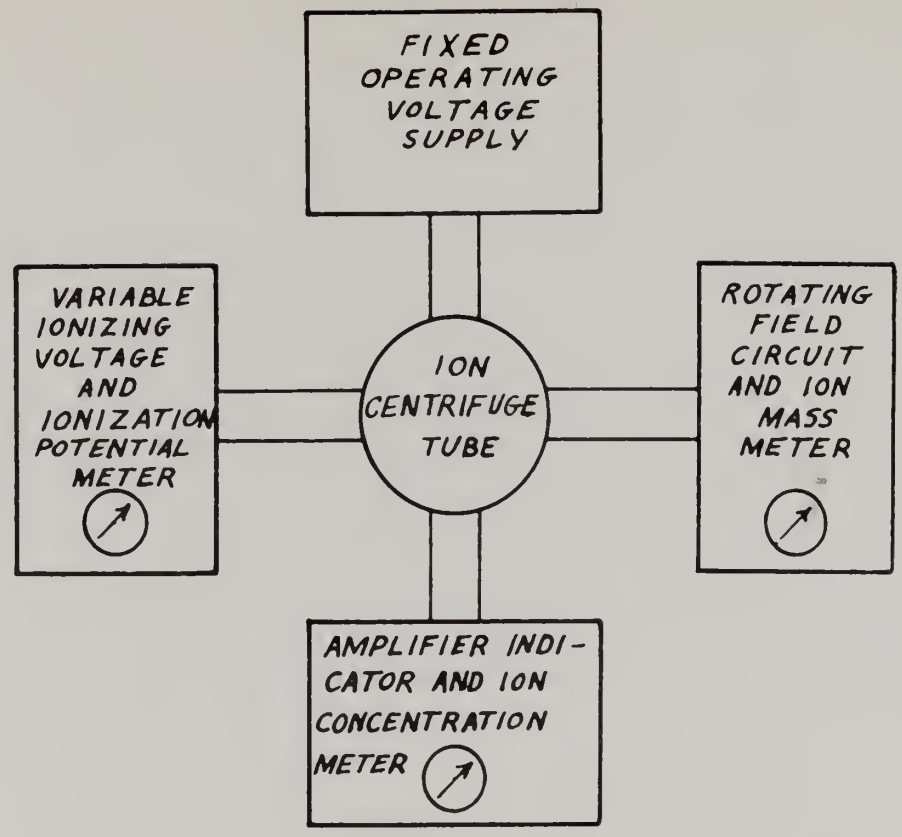

FIG. 7. Electrostatic Ion Centrifuge Electronic Assembly Block Diagram

The first four voltages listed could be supplied by ordinary, regulated, direct current power supplies. The fifth voltage requirement could be fulfilled by the crystal oscillator and quadrature phasing circuit shown in Figure 8. The frequency of the alternating current was fixed by the crystal used while the magnitude of the voltages depended on the buffer amplifier and the transformer ratio. The operation of the phasing section of the circuit will be described later. Other electronic circuits essential to the operation of the Ion Centrifuge may all be described as indicator circuits. An Ionization Guage with its associated amplifier and meter would indicate tube pressure. Separate meters would indicate the ionizing grid voltage and the magnitude of the rotating electrostatic field. An alternating current vacuum tube voltmeter would exhibit the voltage induced in the pickup loop of the centrifuge. All these indicators would be necessary for an experimental electronic assembly.

3. The Detection and Determination Process

The electronic process for detecting and determining gases consisted of two separate phases. In the first phase, the sample gas was drawn into the Ion Centrifuge and sealed there at a low pressure. In the second phase, the gas molecules were separated electronically and their relative concentration indicated. The procedure for testing a sample carbon monoxide gas mixture was as follows:

First, the entire system, including the gas generating apparatus, was evacuated to a pressure of approximately 10^{-3} millimeters of mercury, after which both the centrifuge-gas stopcock and the centrifuge-vacuum stopcock were closed. Next, the sample gases were generated one at a time and allowed to enter the mixing flask. The partial pressure of each gas, as recorded by the manometer, represented the relative concentration of that gas. For example, carbon monoxide could be added to the mixing flask

until the manometer showed a pressure of one centimeter. Then oxygen could be admitted to the mixing flask until the manometer indicated a pressure of two centimeters of mercury. The gas mixture in the mixing flask would then be very closely a 50 - 50 mixture of pure carbon monoxide and pure oxygen with roughly 0.05 per cent impurities (air). When the proper gas mixture was ready, the centrifuge-gas stopcock was opened permitting the sample to enter the centrifuge in any desired quantity, and then closed again. The high vacuum system was put into operation, and when the pressure within the centrifuge was down to 10^{-6} mm. of mercury, the centrifuge-vacuum stopcock was closed and the vacuum system shut down. This completed phase one of an experimental gas sample analysis.

Phase two of the gas analysis was the electronic process. The power supply was turned on and all electronic circuits were activated. The cathode structure of the centrifuge tube became heated and emitted electrons. These electrons were attracted by the positive ionizing grid and given sufficient energy to ionize molecules of the gas sample upon collision. By varying the relative ionizing grid to cathode potential, it was possible to give the electrons a wide range of energy. In this way, gas molecules could be "selectively ionized" according to their ionization potentials. Those molecules which were ionized within the confines of the ionizing grid were repelled by the positive voltage of this grid and moved toward the cathode where they picked up electrons and were neutralized. However, a great many electrons passed through the spaces between the ionizing grid wires and ionized gas molecules outside the ionizing grid. Positive ions so created were repelled outward by the ionizing grid voltage and attracted by the negative potential of the accelerating grid and were thus shot out radially from the center of the tube. These radially moving

ions were caught up in the rotating electrostatic field created by a crystal oscillator and phasing circuit. Once in the rotating field, the ions formed clusters at varying radii from the center of the tube, and these clusters rotated with the velocity of the rotating field. The cluster of ions which happened to have the same radius as the pickup loop induced a pulse of voltage in the loop each time it passed. The magnitude of this voltage pulse was proportional to the number of ions in the cluster. The voltage pulses were amplified and their average value was displayed on the indicator unit. Since the magnitude of the four quadrature voltages impressed on the four rotating field plates was variable (i.e., all four voltages could be increased or decreased in unison), the equilibrium radius of any given ion could be changed at will. In this way, ions of any mass could be made to rotate directly beneath the pickup loop. The strength of the rotating field was then a measure of the ionic mass. The rotating field voltage meter was therefore calibrated in terms of ion mass. To sum up, the necessary steps to complete the electronic phase of a gas analysis, then, were these:

a. The ionizing voltage between ionizing grid and cathode was set at a maximum.

b. The rotating field voltage was varied over its entire range, noting any readings of the pickup loop voltage meter (ion concentration indication).

c. Each concentration reading was checked for a multiplicity of ions of the same mass by varying the ionizing voltage and noting any abrupt changes in the concentration reading as well as the ionizing voltage below which there was no concentration indication.

d. The identification of the gaseous components was made through the use of a special Gas Ion Mass and Ionizing Potential Chart.

B. Design Factors

1. General Problems of Design

Before any practical electrostatic Ion Centrifuge tube could be designed and constructed, it was necessary to solve a number of fundamental problems and prove mathematically that the tube would operate as desired. The most apparent and important of these problems will now be listed:

a. Could it be shown mathematically that a positive ion of given mass would rotate in a circle of given radius (the radius of the circle being a function of the mass of the ion) when that ion was subjected to a constant, uniform, rotating, electrostatic field and a stationary, non-uniform, radially symmetric field?

b. How should the stationary, non-uniform, radially symmetric field be created, and how could the magnitude of its force at all points be found?

c. How selective could ionization by collision become as a result of electrode voltage control, remembering that two or more impacts could ionize a molecule of high ionization potential by the process of cumulative ionization?

d. Would an equilibrium point be reached between the creation of new ions of a given mass and deionization of old ions so that the charge of an ion cluster remained constant for a fixed concentration of the gas?

e. What would be the optimum pressure to give maximum ionization and yet be low enough to permit free movement of the ions?

f. What effect would stray electrons (due to cosmic radiation and photoelectric and secondary emission) have on ion current measurements?

g. What space charge (ion sheaths, etc.) might be expected in the electrostatic Ion Centrifuge?

h. What would be the effects of temperature and humidity?

i. Could all the electronic circuits associated with the operation of the Ion Centrifuge be designed for continuous, reliable operation?

j. How simple could the vacuum system be made?

If all ten of the problems listed above could be answered favorably, then the creation of a practical electrostatic centrifuge would follow as a matter of course. In the introductory section of this thesis, it was stated that matters of ionization, deionization, space charge, and stray electrons would not be investigated. Thus problems c, f, and g were not considered in a theoretical sense other than to recognize their existence. Problems d and e were to be solved experimentally. The remaining five problems were considered theoretically and will be discussed presently.

2. Specific Design Factors

The design problems of the last section contained no reference to the creation of a constant, uniform, rotating, electrostatic field because there were available at the time several proven methods of accomplishing this. A simple circuit, illustrated in Figure 8 had been developed for use in radar work to generate four equal phase quadrature voltages. The crystal controlled oscillator was of the tuned plate-tuned grid variety. The plate circuit coil of the buffer amplifier was the primary of a transformer which had two identical secondary windings. The resonant frequencies of the two secondary circuits were adjusted above and below the resonant frequency of the oscillator so that the currents through the secondary windings respectively led and lagged their corresponding voltages by 45 degrees. The four secondary winding terminals

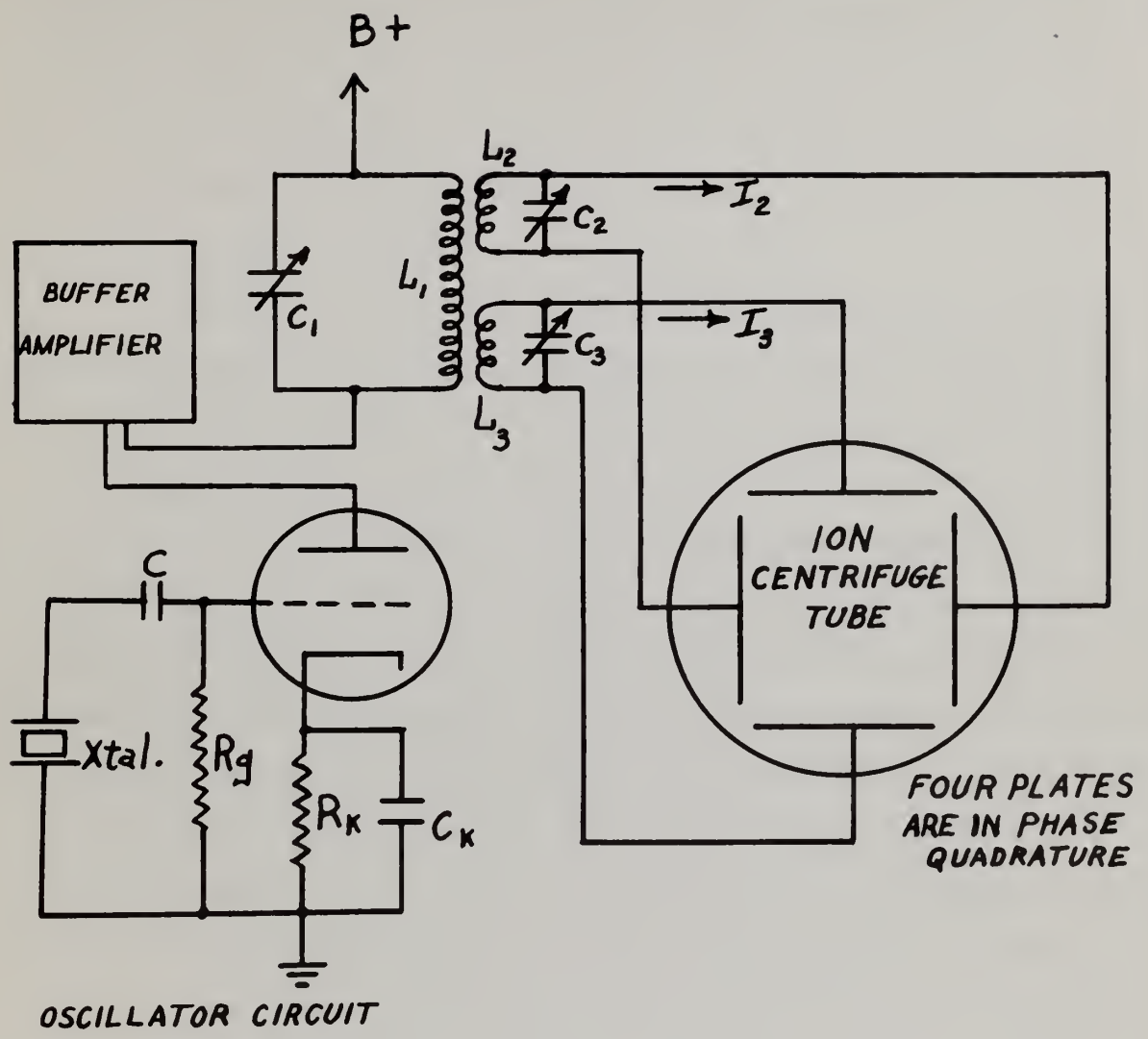

FIG. 8. Rotating Field Electronic Circuit

were then 90 degrees apart in phase as desired. When applied to the four rotating field plates of the Ion Centrifuge, these voltages added vectorily to form the rotating field. The speed of the field in revolutions per second was numerically equal to the frequency of the crystal oscillator in cycles per second. The magnitude of the rotating field was controlled by varying the amplification of the buffer amplifier.

Aside from the direct current power supply circuits of the ordinary regulated type, the only remaining circuits to be designed were those of the indicator unit. For pickup loop measurements, it was planned to constructed a vacuum tube voltmeter of the negative feedback or balanced bridge variety for high stability. Since the input to the meter would be a series of pulses, the voltmeter could be either peak reading or average reading and would be calibrated directly in terms of carbon monoxide concentration. This presupposed, of course, that the induced pulses were of sufficient amplitude to be detected in the first place. The amount of ionization within the centrifuge and the speed of the rotating field would determine the magnitude of these induced pulses. For experimental work in general, for industrial use where just one or two gases were involved, and for use purely as a carbon monoxide indicator, the voltmeter circuit (in conjunction with a relay and warning bell) was deemed quite suitable. However, a more general gas analyzer that would be called upon to detect the presence, or absence, of many gases would have to have a display more general than a single meter if any sort of speed was desired. Different applications of the Ion Centrifuge called for different forms of indicator circuits. A B-Type or Type B radar display using a cathode ray tube with associated circuits would exhibit a gas spectrum in a graph-like manner and would be, perhaps, the most general display attainable. Figure 9

illustrates such a display. Military and naval applications of the Ion Centrifuge may be primarily concerned with indicating the intrusion of any new gas in the atmospheric status quo, and indicator circuits would have to be designed accordingly. On the basis of past experience, it could be safely said that all electronic circuits connected with the Ion Centrifuge could be designed for continuous, reliable operation.

In the preceding paragraph, it is implied that continuous gas concentration readings are possible with the Ion Centrifuge. This point must be further clarified. The centrifuge tube cannot be made to give continuous gas analysis of an arbitrary number of gases unless it is possible to develop some form of porous plug which will continuously admit new molecules of the gas sample without molecular mass discrimination. Since the pressure within the centrifuge was less than one billionth of an atmosphere for proper operation, the rate of flow of gas into the tube had to be very slow. This called for a very slightly porous intake device, and consequently an extremely fine pore material. According to classical theory, the velocity of flow of gases through a porous plug is inversely proportional to the square root of the gas density. In any mixture of pure gases, then, lighter molecules would move through the porous plug more rapidly than heavy molecules, and thus the composition of the gas mixture within the centrifuge would differ from the true composition of the mixture under atmospheric pressure. Concerning the detection of carbon monoxide in the air, a continuous reading centrifuge using a porous plug was entirely practical. Since the composition of air remained approximately constant, the porous plug centrifuge could be calibrated for carbon monoxide concentration. However, for general gas analysis the centrifuge tube must be filled with the gas sample and evacuated each time a reading is required.

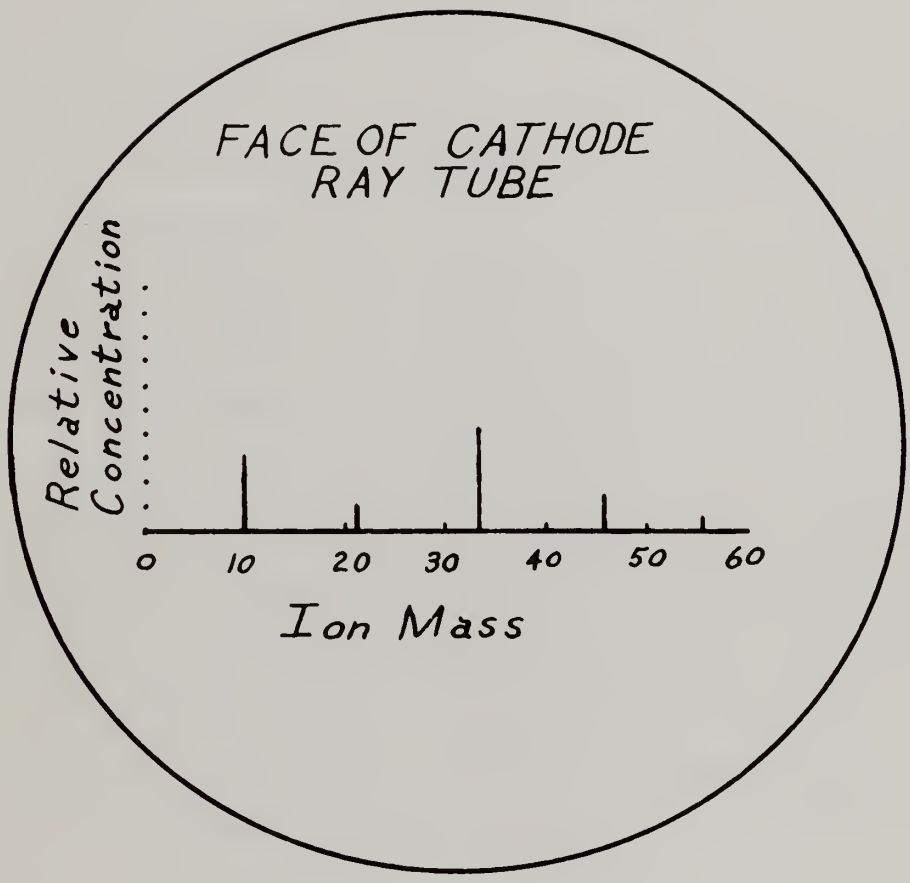

FIG. 9. Type B Radar Display

Another factor that was considered in the design of the Ion centrifuge system was the purity of the gas sample being tested. By this was meant the sample's freedom from dust, soot, water vapor and all foreign matter. It was believed that impurities of the sort mentioned would be detrimental to the operation of the centrifuge over an extended period of time. It was planned to have a removable mesh-type filter or electronic precipitator to clean the gas sample of solid material particles. At the same time removal of water vapor would be effected by the use of a drying tube or condensing system.

The temperature within the Ion Centrifuge was expected to rise to about 100 degrees centigrade or higher. This high temperature within the tube would enable vapors to exist there to a considerable extent. This might make vapor analysis possible. However, if the vapors within the centrifuge had easy access to the freezing-out trap of the vacuum system, they would be rapidly condensed there (at a temperature of -70 degrees centigrade) and would not interfere with pure gas determinations.

The simplicity to which the Ion Centrifuge vacuum system could be reduced in practice could not be foretold in advance of experimental data. However, all theoretical considerations indicated that the vacuum system was the component assembly most likely to keep any electronic gas analyzer in the laboratory. Free movement of ions required mean free paths greater than the order of magnitude of the centrifuge tube dimensions. This, in turn, required a high vacuum system in all its complexity.

C. Mathematical Theory

The entire theory of the electrostatic Ion Centrifuge is based primarily on the proposition that positive ions will be separated in a definite combination of moving and stationary electrostatic fields--as

stated in the first general design problem. In order to confirm or invalidate this proposition, it was necessary to investigate, mathematically, the motion of a positive ion in the Ion Centrifuge. Two separate analyses were made from different points of view to determine the differential equations of motion, and two different methods were used to solve these differential equations.

Referring to Figure 10, it is quite easy to find the x and y components of force acting on a positive ion in the electrostatic Ion Centrifuge. From the figure, the force components of the rotating field, F_o, and the stationary, radial field, F_r, may be listed as below:

Force	x - Component	y - Component
F_r	$-F_r \cos \theta$	$-F_r \sin \theta$
F_o	$F_o \cos \alpha$	$F_o \sin \alpha$

Here, θ is the position angle of the positive ion (i.e., θ is the arc tan y/x) and $\alpha = \omega t$ is the angle that the rotating field makes with the positive x axis. The rotating field is assumed to have a constant angular velocity of ω radians per second. By Newton's Laws,

$$\sum F_x = m \frac{d^2x}{dt^2} \quad \text{and} \quad \sum F_y = m \frac{d^2y}{dt^2}.$$

Now substitute for $\sum F_x$ and $\sum F_y$:

$$F_o \cos \omega t - F_r \cos \theta = m \frac{d^2x}{dt^2} \qquad \text{(a)}$$

$$F_o \sin \omega t - F_r \sin \theta = m \frac{d^2y}{dt^2} \qquad \text{(b)}$$

It will be more convenient to use polar coordinates and therefore equations (a) and (b) can be transformed as follows:

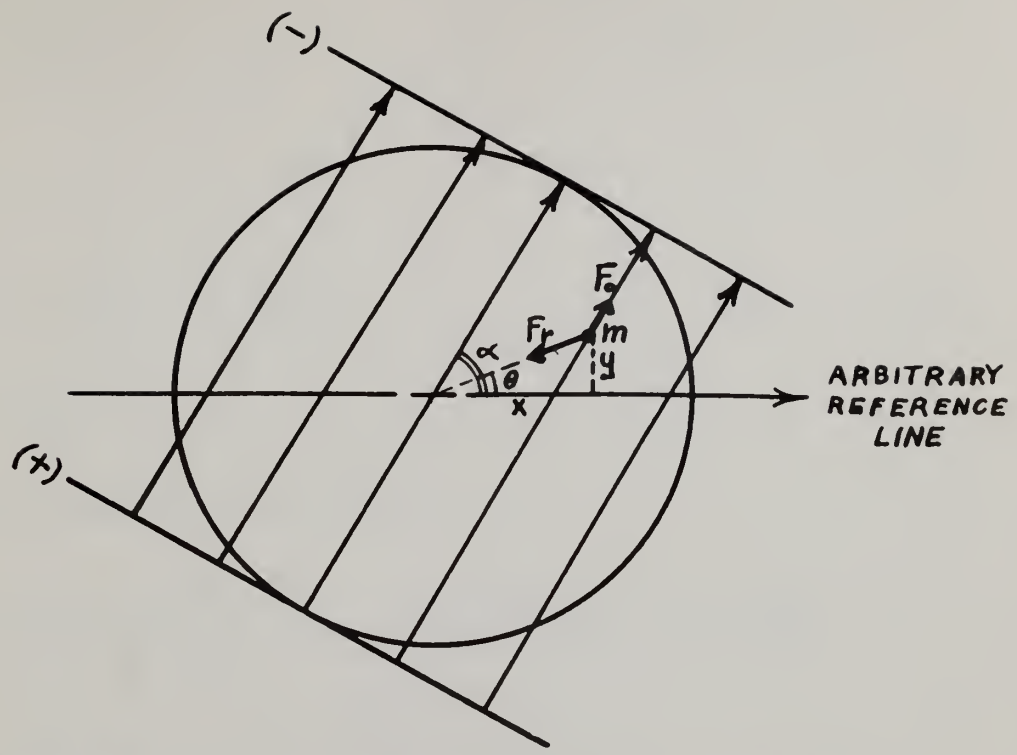

F_o = CONSTANT MAGNITUDE FORCE OF ROTATING FIELD

F_r = FORCE OF RADIALLY SYMMETRIC FIELD

$\alpha = \omega t$ = ROTATING FIELD ANGLE

θ = PARTICLE POSITION ANGLE

FIG 10. Forces on a Positive Ion of the Electrostatic Ion Centrifuge

$$x = r \cos \theta$$

$$\frac{dx}{dt} = -r \sin \theta \frac{d\theta}{dt} + \cos \theta \frac{dr}{dt}$$

$$\frac{d^2x}{dt^2} = -\frac{dr}{dt} \sin \theta \frac{d\theta}{dt} - r \cos \theta \left(\frac{d\theta}{dt}\right)^2 - r \sin \theta \frac{d^2\theta}{dt^2} - \sin \theta \frac{dr}{dt}\frac{d\theta}{dt} + \cos \theta \frac{d^2r}{dt^2}$$

$$y = r \sin \theta$$

$$\frac{dy}{dt} = r \cos \theta \frac{d\theta}{dt} + \sin \theta \frac{dr}{dt}$$

$$\frac{d^2y}{dt^2} = \frac{dr}{dt} \cos \theta \frac{d\theta}{dt} - r \sin \theta \left(\frac{d\theta}{dt}\right)^2 + r \cos \theta \frac{d^2\theta}{dt^2} + \cos \theta \frac{dr}{dt}\frac{d\theta}{dt} + \sin \theta \frac{d^2r}{dt^2}$$

The differential equations then become:

$$F_o \cos \theta t - F_r \cos \theta = m\left[\frac{d^2r}{dt^2} \cos \theta - 2 \frac{dr}{dt}\frac{d\theta}{dt} \sin \theta - r \cos \theta \left(\frac{d\theta}{dt}\right)^2 - r \sin \theta \frac{d^2\theta}{dt^2}\right] \qquad (c)$$

$$F_o \sin \omega t - F_r \sin \theta = m\left[\frac{d^2r}{dt^2} \sin \theta + 2 \frac{dr}{dt}\frac{d\theta}{dt} \cos \theta - r \sin \theta \left(\frac{d\theta}{dt}\right)^2 + r \cos \theta \frac{d^2\theta}{dt^2}\right] \qquad (d)$$

Divide equation (c) by cos θ and equation (d) by sin θ, then subtract (c) from (d).

$$F_o \frac{\sin \omega t}{\sin \theta} - F_r = m\left[\frac{d^2r}{dt^2} + 2 \frac{dr}{dt}\frac{d\theta}{dt} \operatorname{ctn} \theta - r\left(\frac{d\theta}{dt}\right)^2 + r \operatorname{ctn} \theta \frac{d^2\theta}{dt^2}\right] \qquad (e)$$

$$F_o \frac{\cos \omega t}{\cos \theta} - F_r = m\left[\frac{d^2r}{dt^2} - 2 \frac{dr}{dt}\frac{d\theta}{dt} \tan \theta - r\left(\frac{d\theta}{dt}\right)^2 - r \tan \theta \frac{d^2\theta}{dt^2}\right] \qquad (f)$$

$$F_o\left[\frac{\sin \omega t}{\sin \theta} - \frac{\cos \omega t}{\cos \theta}\right] = 2m \frac{dr}{dt}\frac{d\theta}{dt}(\operatorname{ctn} \theta + \tan \theta) + mr \frac{d^2\theta}{dt^2}(\operatorname{ctn} \theta + \tan \theta) \qquad (g)$$

but $\left[\frac{\sin \omega t}{\sin \theta} - \frac{\cos \omega t}{\cos \theta}\right] = \frac{\sin(\omega t - \theta)}{\sin \theta \cos \theta}$ and $(\operatorname{ctn} \theta + \tan \theta) = \frac{1}{\sin \theta \cos \theta}$.

Equation (g) then becomes:

$$mr\frac{d^2\theta}{dt^2} + 2m\frac{dr}{dt}\frac{d\theta}{dt} = F_o \sin(\omega t - \theta) \qquad (1)$$

Now, going back to equations (c) and (d), divide the former by sin θ and the latter by cos θ and then add:

$$F_o\frac{\cos\omega t}{\sin\theta} - F_r\frac{\cos\theta}{\sin\theta} = m\left[\frac{d^2r}{dt^2}\frac{\cos\theta}{\sin\theta} - 2\frac{dr}{dt}\frac{d\theta}{dt} - r\left(\frac{d\theta}{dt}\right)^2\frac{\cos\theta}{\sin\theta} - r\frac{d^2\theta}{dt^2}\right] \qquad (h)$$

$$F_o\frac{\sin\omega t}{\cos\theta} - F_r\frac{\sin\theta}{\cos\theta} = m\left[\frac{d^2r}{dt^2}\frac{\sin\theta}{\cos\theta} + 2\frac{dr}{dt}\frac{d\theta}{dt} - r\left(\frac{d\theta}{dt}\right)^2\frac{\sin\theta}{\cos\theta} + r\frac{d^2\theta}{dt^2}\right] \qquad (i)$$

$$F_o\left[\frac{\cos(\omega t - \theta)}{\sin\theta\cos\theta}\right] - F_r(\operatorname{ctn}\theta + \tan\theta) = m(\operatorname{ctn}\theta + \tan\theta)\left[\frac{d^2r}{dt^2} - r\left(\frac{d\theta}{dt}\right)^2\right] \qquad (j)$$

Upon simplification, equation (j) becomes:

$$m\frac{d^2r}{dt^2} - mr\left(\frac{d\theta}{dt}\right)^2 = F_o\cos(\omega t - \theta) - F_r \qquad (2)$$

Equations (1) and (2) are the exact differential equations of the electrostatic Ion Centrifuge. They are simultaneous, second order, second degree equations and do not have a solution in terms of elementary functions. The approximate solution of these equations may be found by a numerical, step-by-step method. Before the numerical integration was carried out, however, the investigator derived these same equations of motion by means of the Lagrange formulation. It was hoped that this additional derivation would accomplish two results: First, it would act as a check on the Newton's Law derivation; Second, it might shed some light on the probable motion of the positive ions.

In order to use the Lagrange Equations of Motion, it is necessary to know the kinetic and potential energy of a positive ion in the electrostatic fields of the Ion Centrifuge. For an ion moving in two

dimensions (as will be the case in central force problems), the kinetic energy is:

$$T = \frac{1}{2} m v^2 = \frac{1}{2} m \left[\left(\frac{dx}{dt}\right)^2 + \left(\frac{dy}{dt}\right)^2 \right]$$

In polar coordinates this becomes:

$$T = \frac{1}{2} m \left[\dot{r}^2 - r^2 \dot{\theta}^2 \right] \quad \text{where } \dot{r} = \frac{dr}{dt}, \text{ and } \dot{\theta} = \frac{d\theta}{dt}.$$

Now, the potential energy at any point within the Ion Centrifuge depends on the strength of two electrostatic fields. The potential due to the non-uniform, radially symmetric field is purely a function of the radius, r, to the point in question--that is, $V = -V(r)$. The potential due to the uniform, rotating field is a function both of the position of the ion and the position of the field. If the negative rotating field plate is assumed to be zero potential (see Figure 11), the potential increases linearly to its maximum value at the positive plate. The potential at any point between the plates is $F_o s$, where F_o is the constant force field and s is the distance to the zero potential plate. The potential due to the rotating field can now be considered a function of s. However, s varies with the difference of the two angles $\alpha = \omega t$ and θ as a curtate cycloid. The difference angle $(\alpha - \theta)$ or $(\omega t - \theta)$ is clearly the angle between the rotating field and the radius vector of the ion. When $(\omega t - \theta)$ is zero, the distance s will have its smallest value. To visualize the cycloid relationship, think of the rotating field as being stationary while the entire Ion Centrifuge rotates as though it were rolled along its circumference on a straight line. The ion of mass m in Figure 11 will be seen to describe a curtate cycloid. The equations of the curtate cycloid are:

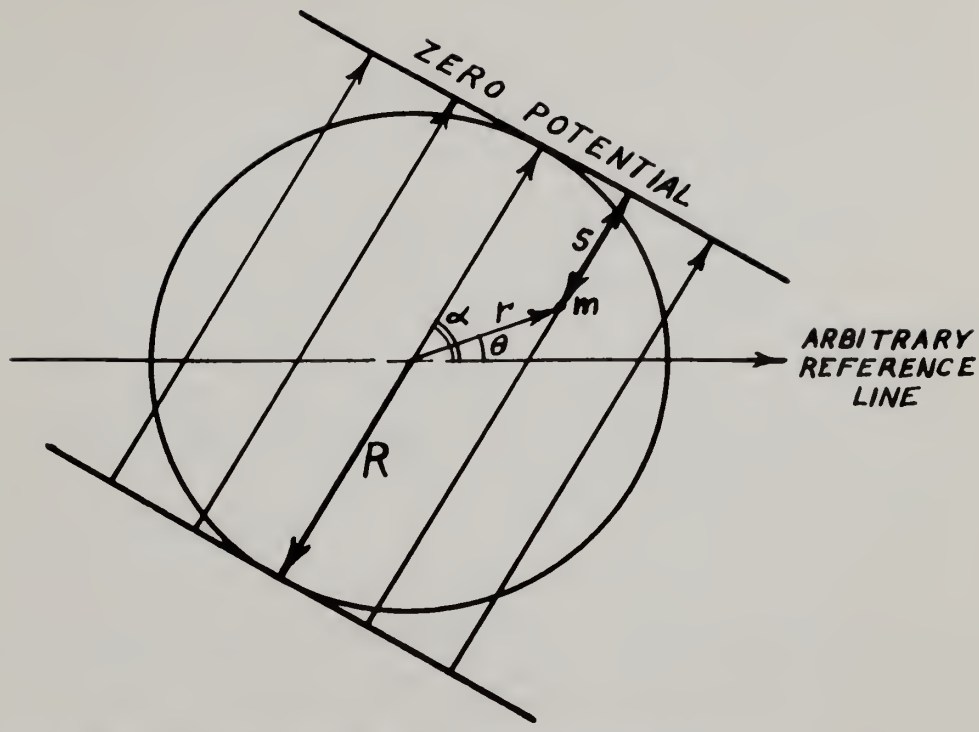

S = DISTANCE FROM ION TO ZERO POTENTIAL

R = ONE HALF THE DISTANCE BETWEEN ROTATING FIELD PLATES - EQUIVALENT TO RADIUS VECTOR OF ROTATING FIELD

$\alpha = \omega t$ = ROTATING FIELD ANGLE

θ = PARTICLE POSITION ANGLE

FIG. 11. Energy of a Positive Ion of the Electrostatic Ion Centrifuge

$$x = R\phi - r \sin \phi$$

$$y = R - r \cos \phi = s$$

where ϕ is the angle through which the circle has been rolled (or the field rotated with respect to the radius r). The y component of the cycloid equations gives the magnitude of s, and thus determines the potential. The general expression for the potential becomes:

$$V = - V(r) + F_o s$$

$$= - V(r) + F_o \left[R - r \cos (\omega t - \theta)\right]$$

It is now possible to set up the Lagrange equations of motion:

$$T = \frac{1}{2} m(\dot{r}^2 + r^2 \dot{\theta}^2)$$

$V = - V(r) + F_o R - F_o r \cos(\omega t - \theta)$. The Lagrangian becomes:

$$L = T - V = \frac{1}{2} m(\dot{r}^2 + r\dot{\theta}^2) + V(r) + F_o r \cos(\omega t - \theta) - F_o R \ .$$

The two equations of motion are then:

$$\frac{d}{dt} \frac{\partial L}{\partial \dot{r}} - \frac{\partial L}{\partial r} = 0 \qquad \text{and} \qquad \frac{d}{dt} \left(\frac{\partial L}{\partial \dot{\theta}}\right) - \frac{\partial L}{\partial \theta} = 0$$

Performing the indicated operations of the above two equations there results:

$$m \ddot{r} - m r \dot{\theta}^2 - \frac{d}{dr} V(r) - F_o \cos(\omega t - \theta) = 0 \qquad (k)$$

$$m r^2 \ddot{\theta} + 2 m r \dot{\theta} \dot{r} + F_o r \cos \omega t \sin \theta - F_o r \sin \omega t \cos \theta = 0 \qquad (\ell)$$

Equation (k) is identical with Equation (2) since

$$\frac{d}{dr} V(r) = - F_r \ .$$

Equation (1) is identical with equation (ℓ) since

$$- F_o r (\cos \omega t \sin \theta - \sin \omega t \cos \theta) = r F_o \sin(\omega t - \theta) \ .$$

In the light of the Lagrangian derivation, it became evident that

equations (1) and (2) were correct. The next step of the problem was to assume certain dimensions and operating conditions of the electrostatic Ion Centrifuge and then proceed with the numerical integration of equations (1) and (2). The cyclic variation of potential of the centrifuge strongly suggests that the motion of the ions will be some sort of complicated oscillation.

To begin with, the two differential equations (1) and (2) were transformed to approximate equations by substituting finite increments for the differential expressions. Thus dt became Δt, dt^2 became Δt^2, $d\theta$ became $\Delta\theta$, $d^2\theta$ became $\Delta^2\theta$, dr became Δr, and d^2r became $\Delta^2 r$. The equations thus obtained were solved for the second order increments $\Delta^2 r$ and $\Delta^2\theta$:

$$\Delta^2\theta = \frac{F_o}{mr}\,\Delta t^2 \sin(\omega t - \theta) - \frac{2}{r}\,\Delta\theta\,\Delta r \qquad \text{(A)}$$

$$\Delta^2 r = r(\Delta\theta)^2 - \frac{F_r}{m}\,\Delta t^2 + \frac{F_o}{m}\,\Delta t^2 \cos(\omega t - \theta) \qquad \text{(B)}$$

Figure 12 shows the assumed dimensions and operating conditions of the centrifuge tube. To find the approximate velocity with which a positive ion leaves the accelerating grid, consider the field between the ionizing grid and accelerating grid as being uniform. If all neutral molecules ionize at the ionizing grid, then the following equations hold:

$$f_i = \frac{eE}{s} = \frac{400}{300}\,\frac{4.80\ 10^{-10}}{(0.3)} = 21.4\ 10^{-10} \text{ dynes}$$

$$a_i = \frac{f_i}{m} = \frac{21.4\ 10^{-10}}{4.663\ 10^{-23}} = 4.60\ 10^{13} \text{ cm/sec}^2$$

$$t_i = \sqrt{\frac{2s}{a_i}} = \sqrt{\frac{2(0.3)}{4.6\ 10^{13}}} = 1.14\ 10^{-7} \text{ sec.}$$

$$v_i = a_i t_i = 5.24\ 10^{6} \text{ cm/sec.} \cong 0.5 \text{ cm. in } 10^{-7} \text{ sec.}$$

Here, f_i is the force of the approximate ionizing grid-accelerating grid field; a_i is the acceleration of a carbon monoxide ion in this field;

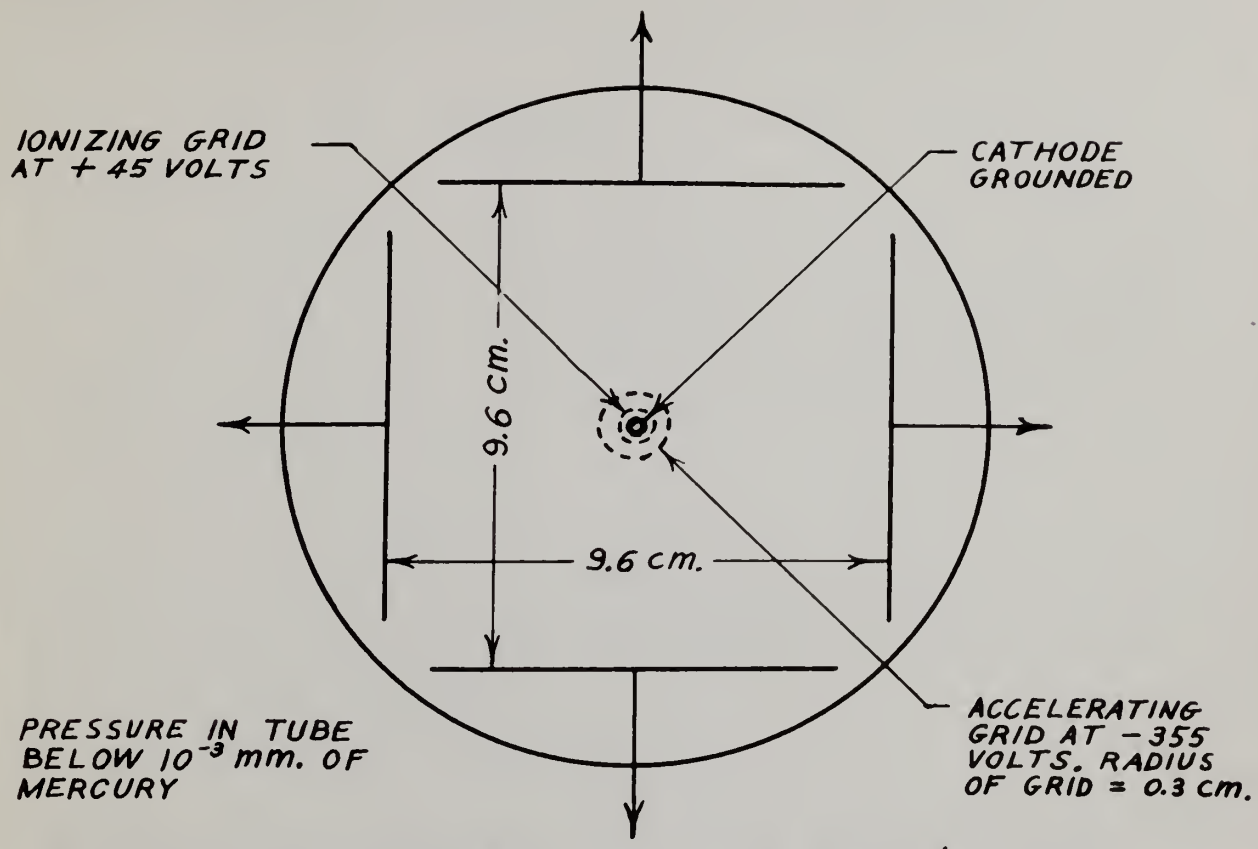

ROTATING FIELD VOLTAGE, $E_R = 600 \sin \omega t$ VOLTS

ACCELERATING FIELD, $E_i = 400$ VOLTS

MASS OF CO MOLECULE, $m = 4.663 \times 10^{-23}$ GRAMS

CHARGE OF CO MOLECULE, $e = 4.80 \times 10^{-10}$ e.s.u.

ROTATING FIELD VELOCITY, $\omega = 10^6$ RADIANS/SEC.

FIG. 12. Initial Conditions and Assumed Dimensions of the Electrostatic Ion Centrifuge

t_i is the time that the ion spends in the field; and v_i is the velocity with which the ion leaves the field.

The magnitude of the uniform rotating field will be:

$$F_o = \frac{Ee}{s} = \frac{600\ 4.8\ 10^{-10}}{300\ 9.6} = 1.00\ 10^{-10} \text{ dynes/e.s.u.}$$

The uniform rotating field force, F_o, plus the centrifugal reaction of the carbon monoxide ion must be balanced at equilibrium by the radial field, F_r. For the sake of simplicity, assume that the non-uniform radially symmetric field of force F_r varies directly with the radius (i.e., $F_r = k\ r$ dynes/e.s.u.). Then,

$$F_r = kr = F_o + m\omega^2 r.$$

To find the value of k, assume the radius of the equilibrium orbit to be 2.50 centimeters. Substitution of known values in the equation above leads to the following value for k:

$$k = 0.866\ 10^{-10} \text{ dynes/cm.}$$

Since the angular velocity of the rotating field is 10^6 radians per second, the field will move a distance of 0.1 radian in 10^{-7} second. By assuming that the positive ion follows the rotating field upon leaving the accelerating grid, two initial positions of the ion can be stated as below:

Time	Radius	Position Angle
0 sec.	0.3 cm.	0 radians
10^{-7} sec.	0.8 cm.	0.1 radian

From the initial conditions above, the approximate differential equations (A) and (B) can now be solved. Table I is a step-by-step compilation of the successive solutions of the second order differentials or increments $\Delta^2\theta$ and $\Delta^2 r$. The solution of each step generates a new value for the

TABLE I

APPROXIMATE SOLUTION BY STEPS OF THE DIFFERENTIAL EQUATIONS OF THE ELECTROSTATIC ION CENTRIFUGE

Exact Equations

(1) $mr\frac{d^2\theta}{dt^2} + F_o \sin(\theta - \omega t) + 2m\frac{d\theta}{dt}\frac{dr}{dt} = 0$

(2) $m\frac{d^2r}{dt^2} - mr\left(\frac{d\theta}{dt}\right)^2 + F_r - F_o\cos(\omega t - \theta) = 0$

Numerical Constants

$m = 4.663\ 10^{-23}$ grams

$\omega = 1.000\ 10^{6}$ radians/sec.

$F_o = 1.000\ 10^{-10}$ dynes/e.s.u.

$F_r = Kr$ where $K = 0.866\ 10^{-10}$ dynes/cm.

Approximate Equations

$\Delta^2\theta = \frac{F_o \Delta t^2}{mr}\sin(\omega t - \theta) - \frac{2\Delta\theta\Delta r}{r}$ (A)

$\Delta^2 r = r(\Delta\theta)^2 - \frac{F_r}{m}\Delta t^2 + \frac{F_o}{m}\Delta t^2\cos(\omega t - \theta)$ (B)

t sec.	Δt sec.	θ Radians	θ Deg.	r Cm.	$\Delta\theta$ Radians	Δr Cm.	$(\omega t-\theta)$ Radians	$\sin(\omega t-\theta)$	$\frac{F_o\Delta t^2}{mr}$	$\frac{2\Delta\theta\Delta r}{r}$	$\Delta^2\theta$ Radians	$r(\Delta\theta)^2$	$\frac{Kr}{m}\Delta t^2$	$\frac{F_o\Delta t^2}{m}$	$\cos(\omega t-\theta)$	$\Delta^2 r$ Cm.
0	0	0	0°	0.3000	0	0	0	0	0	0	0	0	0	0	1.000	0
$1.0\ 10^{-7}$	$1.0\ 10^{-7}$	0.0500	2° 52′	0.8000	+0.0500	+0.5000	0.0500	0.0500	.02680	.06250	-.06100	.00200	.01487	.02145	.9988	+.00856
$2.0\ 10^{-7}$	$1.0\ 10^{-7}$	0.0390	2° 13′	1.308	-0.0110	+0.5085	0.1610	0.1600	.01640	.00855	+.01100	.00015	.02428	.02145	.9870	-.00290
$3.0\ 10^{-7}$	$1.0\ 10^{-7}$	0.0390	2° 13′	1.814	+0.0000	+0.5056	0.2610	0.2570	.01180	.00000	+.00304	.00000	.03370	.02145	.9660	-.0130
$4.0\ 10^{-7}$	$1.0\ 10^{-7}$	0.0420	2° 24′	2.307	+0.0030	+0.4926	0.3580	0.3510	.00928	.00130	+.00196	.00002	.04290	.02145	.9360	-.0228
$5.0\ 10^{-7}$	$1.0\ 10^{-7}$	0.0470	2° 41′	2.776	+0.0050	+0.4698	0.4530	0.4380	.00773	.00169	+.00169	.00007	.05150	.02145	.8990	-.0321
$6.0\ 10^{-7}$	$1.0\ 10^{-7}$	0.0537	3° 04′	3.214	+0.006[illegible]	+0.4377	0.5463	0.5195	.00667	.00182	+.00164	.00014	.05970	.02145	.8545	-.0413
$7.0\ 10^{-7}$	$1.0\ 10^{-7}$	0.0620	3° 33′	3.610	+0.0083	+0.3964	0.6380	0.5956	.00595	.00183	+.00171	.00025	.06700	.02145	.8027	-.0495
$8.0\ 10^{-7}$	$1.0\ 10^{-7}$	0.0720	4° 08′	3.957	+0.0100	+0.3469	0.7280	0.6655	.00542	.00176	+.00185	.00040	.07350	.02145	.7464	-.0571
$9.0\ 10^{-7}$	$1.0\ 10^{-7}$	0.0839	4° 48′	4.247	+0.0119	+0.2898	0.8161	0.7278	.00505	.00162	+.00156	.00060	.07890	.02145	.6858	-.0636
$1.0\ 10^{-6}$	$1.0\ 10^{-7}$	0.0974	5° 35′	4.473	+0.0134	+0.2262	0.9026	0.7849	.00479	.00136	+.00240	.00081	.08310	.02145	.6196	-.0690
$1.1\ 10^{-6}$	$1.0\ 10^{-7}$	0.1133	6° 29′	4.630	+0.0159	+0.1572	0.9867	0.8342	.00463	.00108	+.00278	.00116	.08600	.02145	.5514	-.0730
$1.2\ 10^{-6}$	$1.0\ 10^{-7}$	0.1319	7° 33′	4.714	+0.0186	+0.0842	1.0681	0.8762	.00455	.00067	+.00331	.00164	.08760	.02145	.4819	-.0756
$1.3\ 10^{-6}$	$1.0\ 10^{-7}$	0.1539	8° 49′	4.723	+0.0220	+0.0086	1.1461	0.9112	.00454	.00008	+.00406	.00228	.08770	.02145	.4120	-.0766
$1.4\ 10^{-6}$	$1.0\ 10^{-7}$	0.1799	10° 17′	4.655	+0.0260	-0.0680	1.2201	0.9392	.00461	.00076	+.00509	.00316	.08650	.02145	.3434	-.0760
$1.5\ 10^{-6}$	$1.0\ 10^{-7}$	0.2110	12° 05′	4.511	+0.0311	-0.1440	1.2890	0.9606	.00475	.00198	+.00655	.00436	.08380	.02145	.2760	-.0735
$1.6\ 10^{-6}$	$1.0\ 10^{-7}$	0.2487	14° 15′	4.293	+0.0377	-0.2175	1.3513	0.9760	.00500	.00382	+.00870	.00609	.07970	.02145	.2177	-.0689
$1.7\ 10^{-6}$	$1.0\ 10^{-7}$	0.2951	16° 54′	4.007	+0.0464	-0.2864	1.405	0.9863	.00536	.00663	+.01191	.00861	.07440	.02145	.1650	-.0623
$1.8\ 10^{-6}$	$1.0\ 10^{-7}$	0.3534	20° 15′	3.658	+0.0583	-0.3487	1.447	0.9923	.00587	.01112	+.01694	.01243	.06800	.02145	.1239	-.0529
$1.9\ 10^{-6}$	$1.0\ 10^{-7}$	0.4286	24° 33′	3.256	+0.0752	-0.4016	1.471	0.9950	.00659	.01855	+.02511	.01846	.06050	.02145	.0992	-.0399
$2.0\ 10^{-6}$	$1.0\ 10^{-7}$	0.5289	30° 02′	2.815	+0.1003	-0.4415	1.471	0.9950	.00762	.03140	+.03899	.02825	.05230	.02145	.0995	-.0219
$2.1\ 10^{-6}$	$1.0\ 10^{-7}$	0.6682	38° 17′	2.351	+0.1393	-0.4634	1.432	0.9904	.00913	.05490	+.06395	.04560	.04370	.02145	.1386	+.00487
$2.2\ 10^{-6}$	$1.0\ 10^{-7}$	0.8715	49° 56′	1.893	+0.2033	-0.4585	1.328	0.9707	.01133	.09850	+.1095	.07820	.03515	.02145	.2400	+.0482

TABLE I (continued)

APPROXIMATE SOLUTION BY STEPS OF THE
DIFFERENTIAL EQUATIONS OF THE ELECTROSTATIC
ION CENTRIFUGE

t Sec.	Δt Sec.	θ Radians	θ Deg.	r Cm.	$\Delta\theta$ Radians	Δr Cm.	$(wt-\theta)$ Radians	$\sin(wt-\theta)$	$\frac{F_0 \Delta t^2}{mr}$	$\frac{2\Delta\theta\Delta r}{r}$	$\Delta^2\theta$ Radians	$r(\Delta\theta)^2$	$\frac{Kr\Delta t^2}{m}$	$\frac{F_0\Delta t^2}{m}$	$\cos(wt-\theta)$	$\Delta^2 r$ Cm.
$2.3\ 10^{-6}$	$1.0\ 10^{-7}$	1.184	67° 51′	1.483	+.3128	−0.4103	1.116	.8982	.0145	.1730	+.1860	.1453	.02758	.02145	.4396	+.1270
$2.4\ 10^{-6}$	$1.0\ 10^{-7}$	1.683	96° 26′	1.199	+.4988	−0.2833	0.7169	.6571	.0179	.2358	+.2476	.2982	.02227	.02145	.7539	+.2921
$2.5\ 10^{-6}$	$1.0\ 10^{-7}$	2.429	139° 11′	1.208	+.7463	+0.0088	0.0706	.0706	.01777	.01088	−.00963	.6750	.02243	.02145	.9975	+.6964
$2.6\ 10^{-6}$	$1.0\ 10^{-7}$	3.166	181° 24′	1.913	+.7367	+0.7052	0.5661	.5363	.01120	.5425	−.5485	1.038	.03557	.02145	.8440	1+.0205
$2.7\ 10^{-6}$	$1.0\ 10^{-7}$	3.354	192° 11′	3.639	+.1882	+1.726	0.6543	.6087	.00590	.1783	−.1819	.1288	.06760	.02145	.7935	+.0782
$2.8\ 10^{-6}$	$1.0\ 10^{-7}$	3.360	192° 33′	5.443	+.0063	+1.804	0.5606	.5316	.00394	.004180	−.00627	.000216	.1011	.02145	.8470	−.0827
$2.9\ 10^{-6}$	$1.0\ 10^{-7}$	3.361	192° 33′	7.164	+.00003	+1.721	0.4606	.4444	.002996	.000014	−.00134	.000000	.1332	.02145	.8958	−.1140
$3.0\ 10^{-6}$	$1.0\ 10^{-7}$	3.359	192° 28′	8.771	−.00131	+1.607	0.3593	.3516	.002446	.000480	−.00038	.000015	.1630	.02145	.9362	−.1429
$3.1\ 10^{-6}$	$1.0\ 10^{-7}$	3.358	192° 22′	10.24	−.00169	+1.464	0.2576	.2549	.002098	.000484	−.00005	.000029	.1900	.02145	.9670	−.1692
$3.2\ 10^{-6}$	$1.0\ 10^{-7}$	3.356	192° 16′	11.53	−.00174	+1.295	0.1559	.1553	.00186	.000391	+.00010	.000035	.2142	.02145	.9879	−.1930
$3.3\ 10^{-6}$	$1.0\ 10^{-7}$	3.354	192° 11′	12.63	−.00164	+1.102	0.0543	.0543	.00170	.000286	+.00028	.000034	.2347	.02145	.9985	−.2133
$3.4\ 10^{-6}$	$1.0\ 10^{-7}$	3.353	192° 06′	13.52	−.00136	+0.8888	0.0471	.0471	.00159	.000179	+.00025	.000025	.2515	.02145	.9989	−.2300
$3.5\ 10^{-6}$	$1.0\ 10^{-7}$	3.352	192° 02′	14.18	−.00111	+0.6588	0.1482	.1476	.00151	.000103	+.00033	.000017	.2630	.02145	.9890	−.2418
$3.6\ 10^{-6}$	$1.0\ 10^{-7}$	3.351	191° 59′	14.60	−.00078	+0.4170	0.2490	.2464	.00147	.000045	+.00041	.000009	.2710	.02145	.9692	−.2502
$3.7\ 10^{-6}$	$1.0\ 10^{-7}$	3.351	191° 59′	14.76	−.00038	+0.1668	0.3494	.3422	.00145	.000008	+.00051	.000002	.2740	.02145	.9396	−.2539
$3.8\ 10^{-6}$	$1.0\ 10^{-7}$	3.351	191° 59′	14.68	+.00013	−0.0871	0.4439	.4185	.00146	.000000	+.00061	.000000	.2725	.02145	.9082	−.2530
$3.9\ 10^{-6}$	$1.0\ 10^{-7}$	3.351	191° 59′	14.34	+.00074	−0.3401	0.5486	.5215	.00149	.000035	+.00074	.000008	.2665	.02145	.8532	−.2482
$4.0\ 10^{-6}$	$1.0\ 10^{-7}$	3.353	192° 06′	13.75	+.00148	−0.5883	0.6471	.6030	.00156	.000127	+.00081	.000030	.2555	.02145	.7978	−.2382
$4.1\ 10^{-6}$	$1.0\ 10^{-7}$	3.355	192° 14′	12.92	+.00230	−0.8265	0.7448	.6777	.00166	.000294	+.00083	.000068	.2400	.02145	.7353	−.2242
$4.3\ 10^{-6}$	$2.0\ 10^{-7}$	3.358	192° 24′	11.87	+.00313	−1.051	0.9417	.8085	.00724	.000555	+.00639	.000116	.8820	.08580	.5885	−.8315
$4.5\ 10^{-6}$	$2.0\ 10^{-7}$	3.368	192° 57′	9.989	+.00952	−1.882	1.132	.9052	.00859	.003580	+.01134	.000906	.7425	.08580	.4248	−.7052
$4.7\ 10^{-6}$	$2.0\ 10^{-7}$	3.389	194° 09′	7.402	+.02086	−2.587	1.311	.9665	.01160	.01460	+.02580	.003230	.5500	.08580	.2554	−.5249
$4.9\ 10^{-6}$	$2.0\ 10^{-7}$	3.435	196° 50′	4.290	+.04666	−3.112	1.465	.9943	.02000	.06760	+.08749	.009350	.3187	.08580	.1060	−.2003
$5.1\ 10^{-6}$	$2.0\ 10^{-7}$	3.570	204° 31′	0.978	+.1341	−3.312	1.530	.9992	.08780	.9070	+.9947	.01760	.0726	.08580	.0403	−.05154
$5.3\ 10^{-6}$	$2.0\ 10^{-7}$	4.698	269° 12′	2.386	+1.129	−3.364	0.6016	.5659	.03595	3.180	−3.200	3.040	.1770	.08580	.8245	−2.792
$5.5\ 10^{-6}$	$2.0\ 10^{-7}$	2.627	150° 30′	8.542	−2.072	−6.156	2.873	.2640	.01005	2.990	+2.987	36.60	.6340	.08580	.9650	−35.88

radius and a new value for the position angle, θ. By choosing a satisfactory time interval, Δt, between the steps, it is possible to plot the position of the ion as accurately as desired. Figures 13 and 14 show the final result of the step-by-step solution. It can be seen that the ion does not follow the circular motion of the rotating field as desired, but oscillates radially with ever increasing radius. The cyclic change of potential energy with time as brought out in the Lagrange formulation explains this strange oscillation. A mechanical model of the two electrostatic fields of the Ion Centrifuge can be constructed as shown in Figure 15. Visualize the potential plane, $V = F_o s$, rotating about axis AB with an angular velocity ω. The ion of mass m will alternately be raised and lowered, its radius increasing as m gains momentum.

Equations (a) and (b) of the electrostatic Ion Centrifuge (see page 32) can be made linear in the variables x and y by introducing a viscosity term that varies with the velocity of the ion. In this way an exact mathematical solution can be obtained for the motion of an ion that is partially slowed down by collision with other ions or neutral molecules. The solution will contain exponential and trigonometric terms in general. It may be interesting to check the approximate solution already obtained of the exact equations of motion with the exact solution of approximate equations of motion.

Since $F_r = kr$, as assumed in the approximate solution, the two linear equations to be solved are:

$$m \frac{d^2x}{dt^2} - \eta \frac{dx}{dt} + kx = F_o \cos \omega t \qquad \text{(m)}$$

$$m \frac{d^2y}{dt^2} - \eta \frac{dy}{dt} + ky = F_o \sin \omega t \qquad \text{(n)}$$

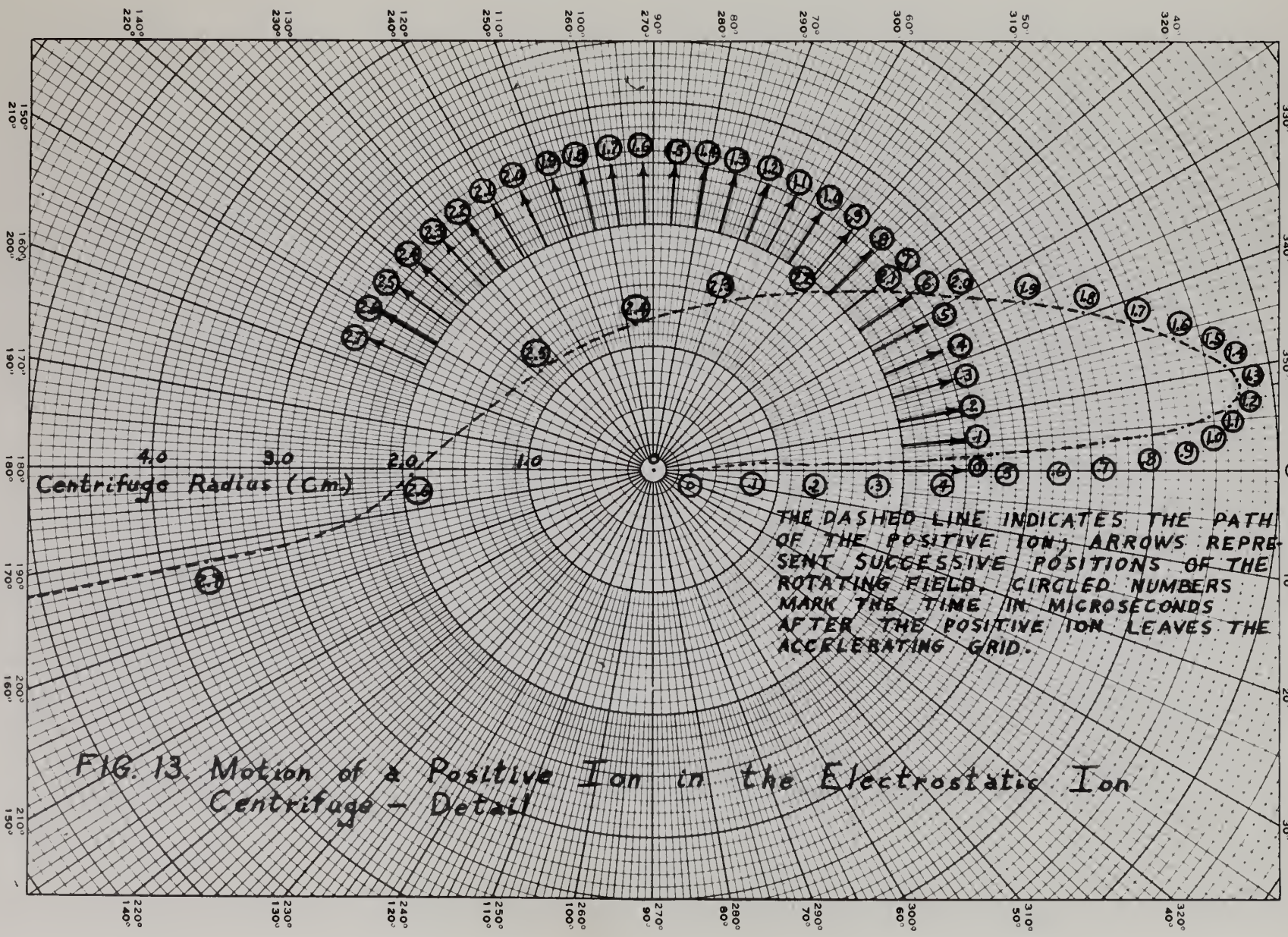

FIG. 13. Motion of a Positive Ion in the Electrostatic Ion Centrifuge – Detail

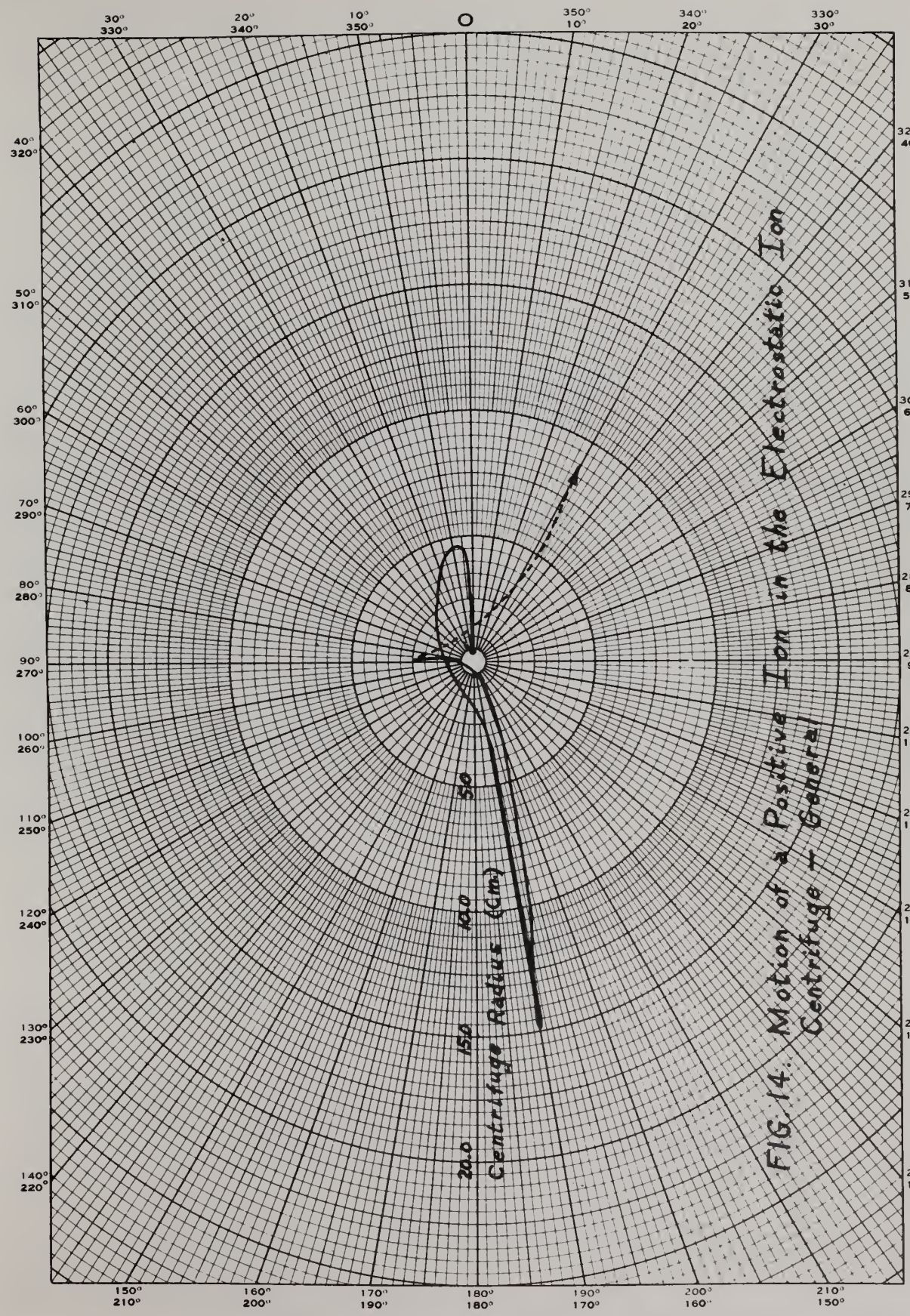

FIG. 14. Motion of a Positive Ion in the Electrostatic Ion Centrifuge — General

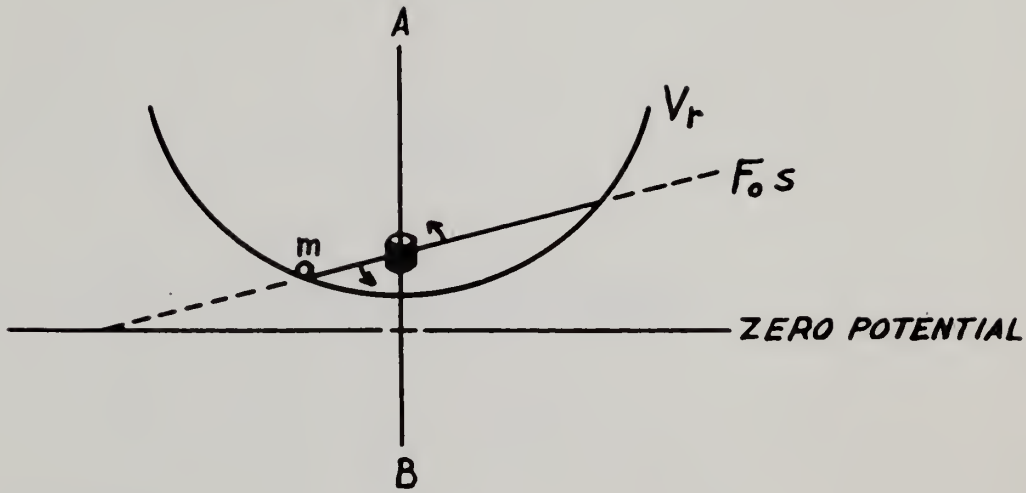

V_r = POTENTIAL OF RADIALLY SYMMETRIC FIELD

$F_o s$ = POTENTIAL OF ROTATING FIELD

FIG. 15. Mechanical Analogue of the Electrostatic Ion Centrifuge

where η is the coefficient of viscosity for the gas under consideration. For air, the value of η is about 1.7 10^{-4} for pressures ranging from 760 to 10^{-3} mm. of mercury. To solve equation (m), it is customary to first solve the reduced or homogeneous equation

$$m\frac{d^2x}{dt^2} - \eta\frac{dx}{dt} + kx = 0.$$

This homogeneous equation has the solution

$$x = c_1e^{r_1t} + c_2e^{r_2t},$$

where r_1 and r_2 are the roots of the auxiliary equation

$$r^2 - \frac{\eta}{m}r + \frac{k}{m} = 0.$$

Values for r_1 and r_2 are found to be:

$$r_1 = \frac{\eta + \sqrt{\eta^2 - 4mk}}{2m}$$

$$r_2 = \frac{\eta - \sqrt{\eta^2 - 4mk}}{2m}$$

To find the particular integral of equation (m), assume a solution of the form

$$V(t) = A \sin \omega t + B \cos \omega t.$$

Taking the first and second derivatives of V(t), substituting these values in equation (m), and equating like coefficients, there results,

$$- B\omega^2m - A\omega\eta + kB = F_o$$

$$- A\omega^2m + B\omega\eta + kA = 0$$

Solving these equations for A and B yields

$$A = \frac{F_o\omega\eta}{-\omega^2\eta^2 - [k - \omega^2m]^2}$$

$$B = \frac{F_o\omega^2m - F_ok}{-\omega^2\eta^2 - [k - \omega^2m]^2}$$

The complete solution of equation (m) is then:

$$x = c_1 e^{\left(\frac{\eta + \sqrt{\eta^2 - 4mk}}{2m}\right)t} + c_2 e^{\left(\frac{\eta - \sqrt{\eta^2 - 4mk}}{2m}\right)t}$$

$$+ \frac{F_o \omega \eta}{-\omega^2 \eta^2 - \left[k - \omega^2 m\right]^2} \sin \omega t + \frac{F_o \omega^2 m - F_o k}{-\omega^2 \eta^2 - \left[k - \omega^2 m\right]^2} \cos \omega t \qquad (o)$$

By a similar process, equation (n) can be solved to yield an exponential and trigonometric expression for y. Initial conditions can be used to determine the arbitrary constants c_1, c_2, c_3, and c_4. It is sufficient for the purpose of this thesis merely to confirm roughly the approximate solution by steps of the exact equations of motion of the electrostatic Ion Centrifuge. From equation (o), it should be clear that the first exponential term will eventually dominate the sine and cosine terms after a sufficient interval of time, and positive ions will never approach an equilibrium orbit.

At this point it was deemed wise to investigate the type of electrostatic field that would cause charged ions to rotate in circles and separate the ions on the basis of their mass in a linear relationship. The field would have to be radially inward in direction and its magnitude would vary as a function of the radius. A particle moving in a circle has a centrifugal reaction $F_c = \omega^2 mr$. The centripetal force that opposes this reaction originates in the electrostatic field. At equilibrium, these two forces would balance one another, i.e., $F_i = F_c$.

As a first approach, consider the potential of the field to vary directly with the first power of the radius, as was assumed in the solution of equations (1) and (2). The centripetal force of such a field is the rate of change of potential in the direction of the radius:

$$V = kr \quad \text{and} \quad F_i = \frac{dV}{dr} = k$$

Setting $F_i = F_c$, there results:

$$k = \omega^2 mr \quad \text{or} \quad r = \frac{k}{\omega^2 m} .$$

The radius varies inversely with the mass of the ion, providing that the angular velocity remains constant. If it is assumed that the potential of the field varies inversely with the radius, i.e., $V = \frac{k}{r}$, the centripetal force becomes

$$F_i = \frac{dV}{dr} = -\frac{k}{r^2} .$$

Setting $F_i = F_c$ gives:

$$r = \sqrt[3]{\frac{-k}{\omega^2 m}} \quad \text{(here k is negative).}$$

In this case, the radius varies inversely with the cube root of the mass. This is not a particularly desirable field for an Ion Centrifuge.

If the potential of the field varies directly with the cube of the radius, $V = kr^3$, then the centripetal force becomes

$$F_i = \frac{dV}{dr} = 3kr^2 .$$

Setting $F_i = F_c$ gives:

$$r = \frac{\omega^2}{3k} m .$$

This would be the most desirable type of field for an Ion Centrifuge. Ions that were projected into a radial electrostatic field of this sort would be separated on the basis of their mass provided that all ions entered the field with the same velocity. Assuming that this velocity requirement could be satisfied, it would still be a formidable task to create an electrostatic field that varies directly with the cube of the radius. This is essentially a problem in electron optics, and according

to Zworykin and Morton, it is impossible at present, except in very special cases, to find by mathematical means the electrode configuration to give a desired potential distribution.[12] In order to solve the problem, it is necessary to assume an electrode configuration and then try to solve the Laplace equation $\frac{\partial^2 \phi}{\partial x^2} + \frac{\partial^2 \phi}{\partial y^2} + \frac{\partial^2 \phi}{\partial z^2} = 0$ mathematically. It is also possible to solve the problem in two dimensions by conformal mapping or in three dimensions by electrolytic potential mapping.

In the solution of the equations of motion of the electrostatic Ion Centrifuge it was assumed that the non-uniform, radially symmetric field varied directly with the first power of the radius. Figure 16 shows the electrode configuration that was assumed to be capable of producing the required field. The actual potential distribution of this electrode arrangement is unknown. Due to the radial symmetry of the electrodes, it was hoped that the field would be radially symmetric; due to the difference between the inner and outer electrodes, both in spacing and in potential, it was hoped that the field would be non-uniform. To find the equipotential lines in this system, it is necessary to solve the Laplace equation in cylindrical coordinates:

$$\frac{\partial^2 \phi}{\partial z^2} + \frac{1}{r}\frac{\partial}{\partial r}\left(r\frac{\partial \phi}{\partial r}\right) = 0 \qquad \text{(p)}$$

The coordinate axis would be taken as shown in the figure. The method of separation of variables can be applied to equation (p) by assuming $\phi(r,z) = F(z)\,G(r)$. In this way two ordinary differential equations are obtained:

---

[12] V. K. Zworykin and G. A. Morton, Television. (New York: John Wiley and Sons, Inc., 1940), p. 69.

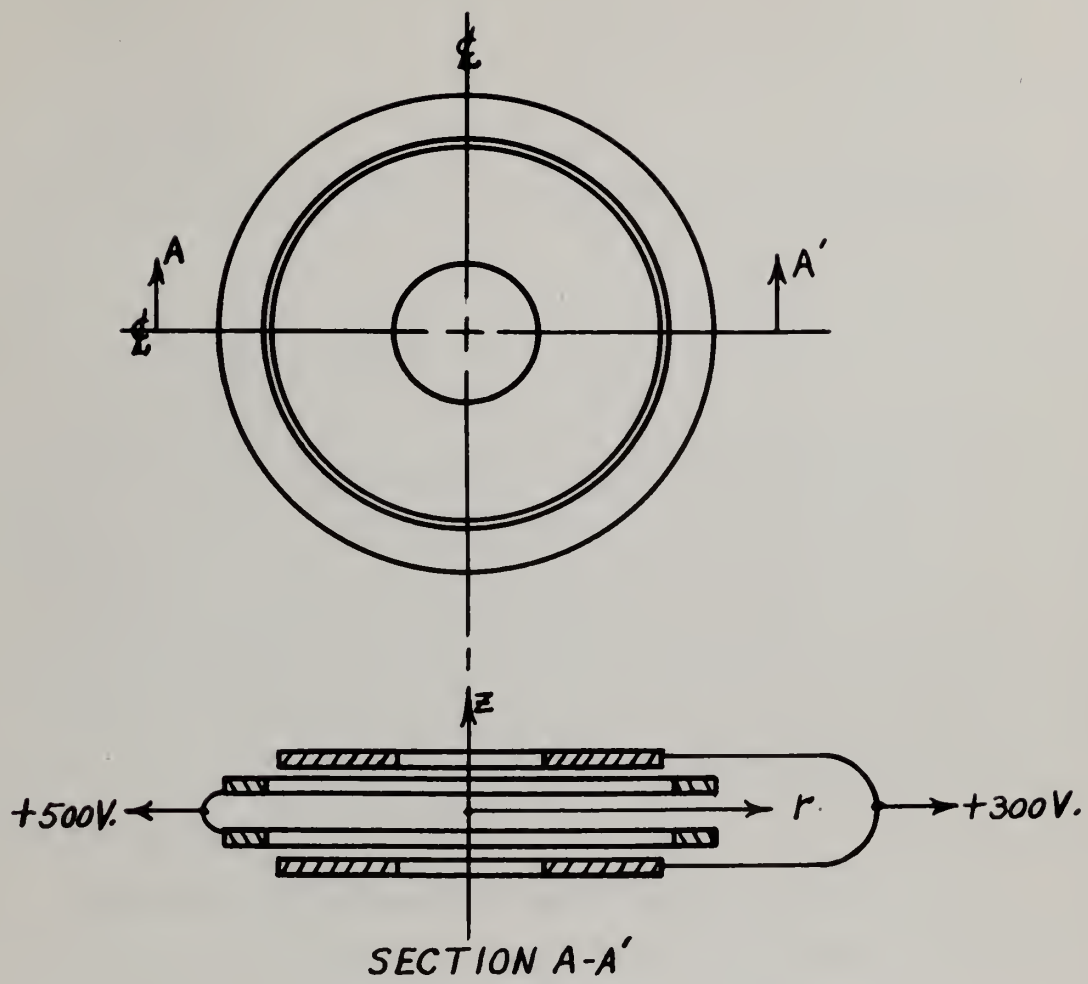

FIG. 16. Non Uniform, Radially Symmetric Field Electrodes

$$\frac{1}{F}\frac{d^2F}{dz^2} = -k^2 \qquad (q)$$

$$\frac{1}{rG}\frac{d}{dr}\left(r\frac{dG}{dr}\right) = k^2 \qquad (r)$$

where k is the separation parameter. The general solutionsof these two equations are:

$$F = ae^{ikz} + be^{-ikz} \qquad (s)$$

$$G = cJ_o(kr) \qquad (t).$$

The most general solution of equation (p) can then be expressed in terms of an integral:

$$\phi(r,z) = \int A(k)\, G(r,k)\, F(z,k)\, dk \qquad (u).$$ [13]

To find the electrostatic potential due to the electrode configuration of Figure 16, the arbitrary constants of equation (u) must be determined by imposing the restrictions of boundary conditions. The investigator has not been able to solve this problem.

Considering all factors, it seemed that a practical electrostatic centrifuge tube presented too many design difficulties. Fortunately, it was possible to turn to the use of a magnetic field to accomplish the desired objectives. In fact, it will become clear that the magnetic field is uniquely suited to separate charged ions in centrifuge fashion. The work that had been done in connection with the electrostatic Ion Centrifuge, especially with the design of the system as a whole, was very valuable background information in the design of the magnetic Ion Centrifuge. The high vacuum system and the gas generating system were identical in both cases. The electronic assembly and the Ion Centrifuge tube, however, were entirely different from their counterparts in the

---

[13] Ibid., pp. 72-73.

electrostatic case. The next main section will present the theory of this magnetic centrifuge, and the section after that will discuss in detail the actual engineering design and practical construction of this electronic carbon monoxide detector.

III. MAGNETIC ION CENTRIFUGE THEORY

A. Generalized Operation

1. Magnetic Field Considerations

In present day electronics, the use of a magnetic field to deflect and focus moving charged particles is becoming more and more common. It is characteristic of a magnetic field to bend a constant velocity ion in a circular orbit, although combinations of electric and magnetic fields impart a wide variety of motions to charged particles. The unique property of the magnetic field, in that it exerts its force perpendicular both to the direction of motion of the ion and the direction of the field, is responsible for its usefulness in these respects.

Since it was quite natural for an ion to be bent into a circular orbit by a magnetic field, the idea of building a centrifuge tube to fit between the pole caps of a magnet logically followed. Once it was decided to do this, the next problem was to determine exactly how the ions were to be created, moved within the field, and detected. A number of evenly spaced ions moving at constant velocity in a circle would induce no current in an adjacent pick-up loop. It would be necessary to terminate such ion flow in an electrometer or grid circuit of a direct current amplifier in order to detect and measure it. If the ions were accelerated in a uniform magnetic field, they would no longer have a circular path. Dr. D. W. Kerst solved the problem of accelerating electrons in a circular orbit by using a non-uniform, radial magnetic field, injecting electrons into this field at certain critical voltages, and increasing the field

simusoidally after injection of the electrons. In this way, Dr. Kerst was able to accelerate electrons to high energy levels in a stable, circular orbit.

Going back to the Ion Centrifuge problem, the chief issue to be resolved was this: Should positive ions be moved in circular orbits at constant velocity and then detected by a direct current amplifier or should they be accelerated, in one way or another, in circular orbits and then detected by an alternating current amplifier? It was decided to work out theoretical systems for both cases and then construct a working model of the simpler one. If it were possible, it would be very convenient to use the same type of magnetic field in both cases. Since a non-uniform, radial field was essential in accelerating ions, could this type of field be used to separate charged ions of different mass moving at constant velocity? A mathematical investigation showed that it could, subject to certain restricting conditions.

As in the electrostatic Ion Centrifuge, the best way to ionize gas molecules was to bombard them with electrons. Since a constant magnetic field had no action upon stationary charged particles, the positive ions had to be given an initial velocity by an electrostatic field. Because of this, ions of different masses would enter the magnetic field with different velocities; to be exact, the velocity of an ion would vary inversely with the square root of its mass. A mathematical consideration revealed that the strength of the radial magnetic field had to vary inversely with the square root of its radius for proper operation. Further investigation and study showed that a magnetic field of this nature could be created by shaping the magnetic pole caps in a parabolic form.

The parabolic pole faces of the magnetic circuit actually

created a non-uniform, radial magnetic field as required in both the case of constant velocity ions and the case of accelerated ions. In the first case, the magnetic field would be kept constant in time, that is, the field would be "steady"; in the second case, the magnetic field would be made to vary in time, presumably by varying the current in certain magnetic field coils. Thus the same magnetic circuit could serve to produce both a steady and a time varying field depending on the excitation of the field coils. Figure 17 shows the working model magnetic circuit as set up for steady field operation. All possible parts of this circuit should be laminated to reduce hysteresis and eddy current losses in time varying operation. Of course the parabolic pole caps should have enough space between them to accommodate the Ion Centrifuge tube and still produce a magnetic field of sufficient intensity.

2. The Magnetic Ion Centrifuge Tube

The magnetic Ion Centrifuge tube would preferably be made of glass (pyrex) with aluminum, brass, and other non-ferrous metals as second choice. Gas adsorption on the inner walls of the tube is a serious problem in electronic gas detection, and glass adsorbs less than any of the metals. In experimental work glass was easier to keep vacuum tight and free of pinholes, and its transparency was a definite aid in many respects. The shape of the centrifuge would be either that of a flattened doughnut or some form of D shape or U shape for steady field operation. It would be fairly small, of the order of a few inches in diameter (the experimental models built were 2.5 inches in diameter) and less than an inch thick. As in the electrostatic case, there would be an ionizing section where positive ions were created, an accelerating section (or gun) for starting the ions in motion in the proper direction, a free space

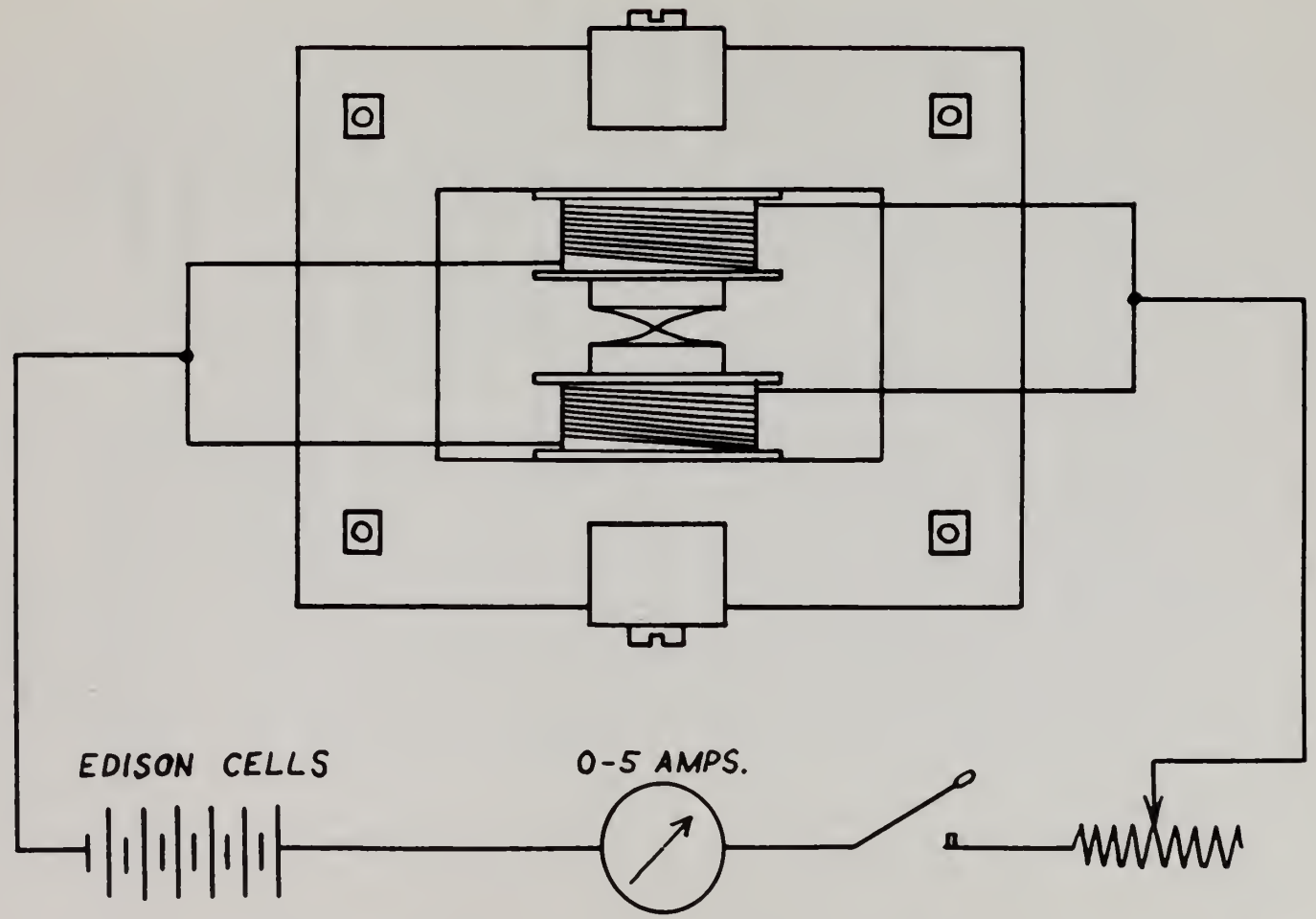

FIG. 17. Magnetic Field Circuit for Steady Field Centrifuge

section within the influence of the magnetic field that would permit the ions to move in circular orbits, and, lastly, an ion detection section that could take one of many forms.

A diagram of the pyrex centrifuge tube built for experimental work is shown in Figure 18. The bulb-like extension of the U tube was the ionizing section; the tube connecting the bulb and the U and which terminates in a nozzle arrangement was the accelerating section. The combination of these two sections was called the "ion gun" for convenience. The U tube was the free space section and contained the connection to the vacuum line. The pickup probe was located at the far end of the U tube diametrically opposite the nozzle. The reverse curve capillary acted as an "equalizer" to permit gas molecules to be evenly distributed throughout the centrifuge and at the same time to prevent electrons or ions from flowing through it. The inner walls of the U tube and equalizer were coated with a conducting layer of metal or graphite which was electrically grounded. All electrical connections were brought into the tube via pyrex to tungsten vacuum tight seals. The purpose of the conducting coating on the inner walls of the U tube was to neutralize those ions which strayed from the equilibrium orbit and all ions which did not have the mass for which the equilibrium orbit was set. A graphite coating, while easier to apply, had the disadvantage of acting like a sponge in soaking up gas molecules.

The cathode of the ionizing section was taken from a number 80 vacuum tube rectifier filament and shaped into a loop. Inside this loop was the ionizing anode cylinder containing a finely cut slit in the plane of the cathode loop. Electrons emitted by the cathode were attracted radially inward by the positive anode. Some of these electrons passed

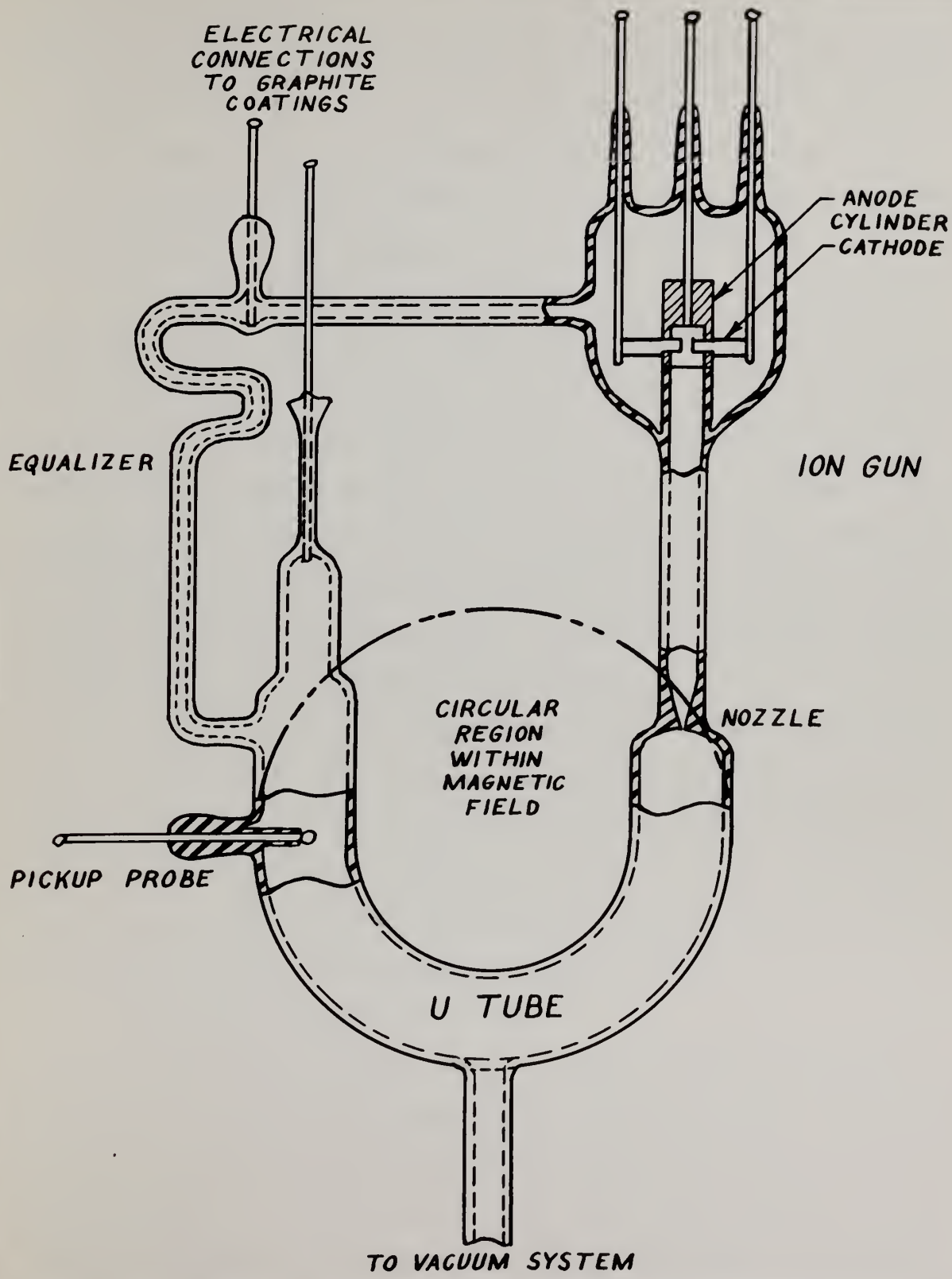

FIG. 18. Steady Field Magnetic Ion Centrifuge Tube

through the anode slit and ionized gas molecules within the anode cylinder. These ions were created all in the same plane and thus effectively started their acceleration toward the ion gun nozzle from the same point as required by theory. The effectiveness of a nozzle in mechanically focusing charged molecules was questionable, but certainly worth trying.

A time varying field centrifuge tube could not be constructed as the tube shown in Figure 18. Such a tube would have to be toroidal in shape, somewhat as the electrostatic Ion Centrifuge. Theoretical considerations dictate either pulsed injection of ions or a definite relationship between the time varying magnetic field current and the ion accelerating voltage. In any event, the electronic circuits would be more complicated for this centrifuge even though the amplifier indicator would be of the conventional alternating current type. Only certain theoretical aspects of such a tube will be discussed in this thesis.

In the particular centrifuge illustrated in Figure 18, only the U tube section was placed between the magnetic pole faces, ions being created and accelerated external to the magnetic field. It was for this reason that the tube did not operate as desired. A later section will discuss the matter more fully. A successful centrifuge tube must create and accelerate positive ions within the magnetic field.

3. Auxiliary Systems

As in the electrostatic case, several components other than the tube were required to complete the gas detection system. Figure 19 is a block diagram of these components. The magnetic circuit has already been discussed, but even here several additional units were required to make this component operational. There had to be a source of direct or alternating current for the field coils and some means of regulating and

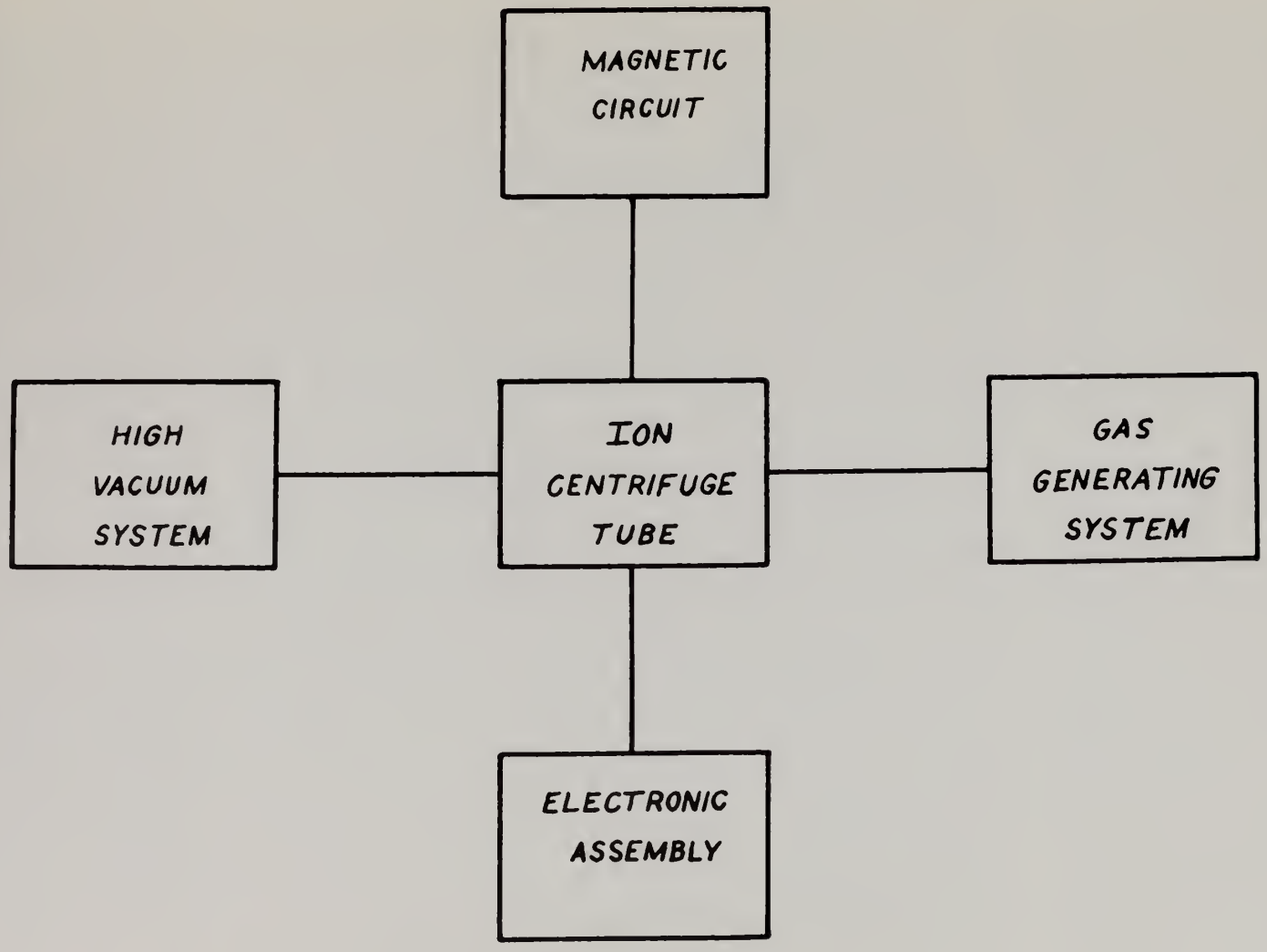

FIG. 19. Block Diagram of Magnetic Ion Centrifuge Gas Detection System

measuring this current. For the steady field centrifuge, a number of six volt Edison cells in series adequately supplied the requisite two to five amperes of coil current. A simple current reostat provided current control, and a direct current ammeter measured the current flow. For any commercial installation, a line voltage rectifier would be used in conjunction with a special current regulator or ballast tube and a good filter for ripple reduction.

The high vacuum and gas generating systems described in Section II were integral parts of the experimental magnetic Ion Centrifuge gas detection system. The fourth component, the electronic assembly, consisted of two separate amplifying circuits and a number of direct and alternating current operating voltages as shown in Figure 20.

In the steady field centrifuge only fixed operating voltages were required. The cathode of the centrifuge tube was preferably supplied a low direct current voltage of from one to six volts. In the experimental circuit that was built, the cathode was connected to a 2.5 volt center tapped transformer winding. The alternating current modulation here could affect only the number of molecules that would be ionized in time, and might impart a slight ripple, if anything, to the amplifier indicator meter reading. The center tap of the winding was grounded. The ionizing anode cylinder was placed anywhere from 22.5 to 45 volts above d.c. ground potential by means of dry cells. Electron flow in the ionizing circuit was measured by a 0 - 10 ma. milliammeter. The inner coatings of the U tube and equalizer were grounded.

The amplifier indicator unit was built about a one tube circuit described by Keith Henney.[14] It was of the balanced bridge variety in

---

[14] Keith Henney, Electron Tubes in Industry. (New York: McGraw Hill Book Co., Inc., 1937), p. 106.

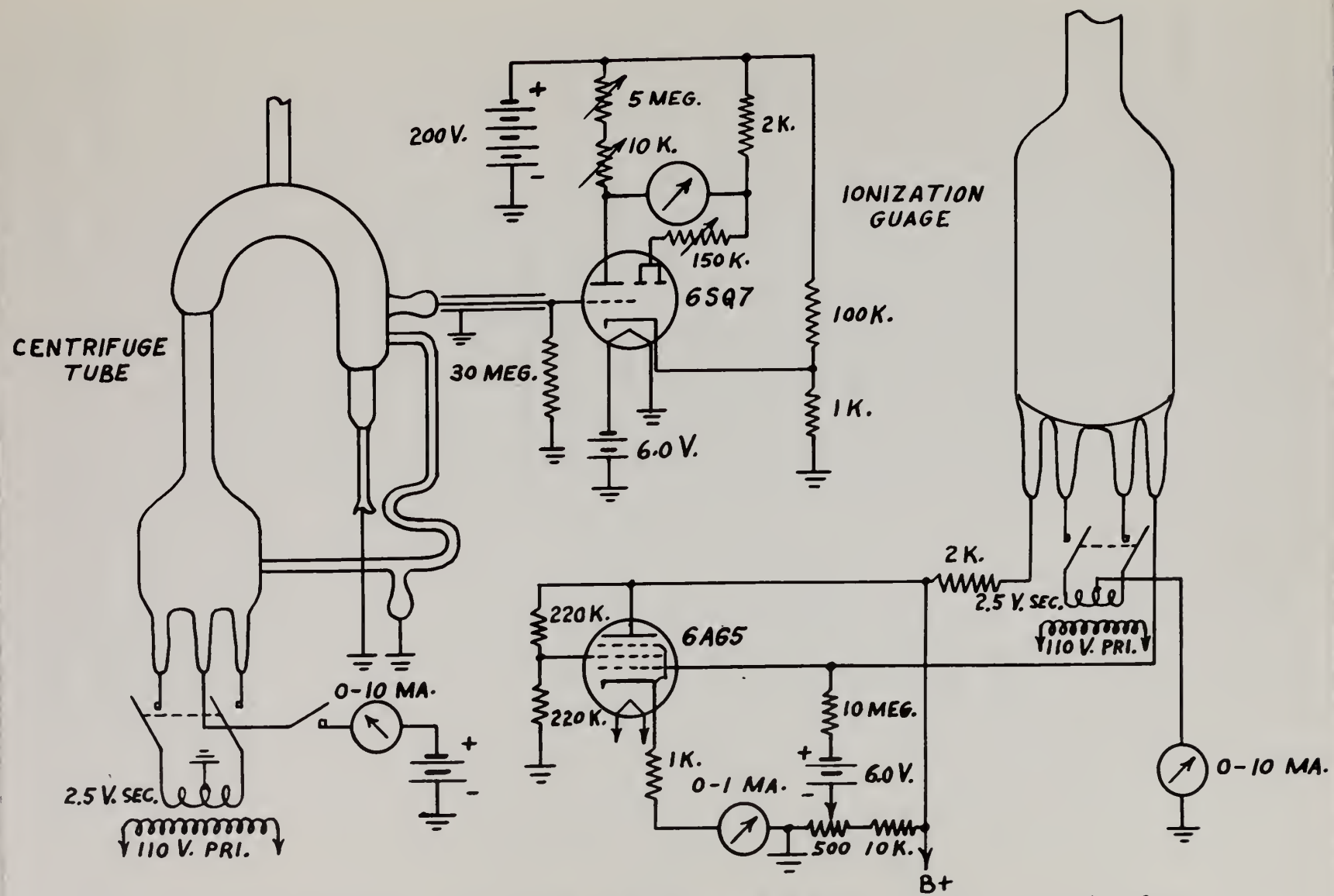

FIG. 20. Electronic Circuits of the Steady Field Centrifuge

which a duo diode high mu triode furnished two arms of the bridge. The circuit was said to permit measuring currents as low as 10^{-13} amperes and increased the sensitivity of the galvanometer used by a factor of 10^5. In the experimental circuit constructed, a 6SQ7 tube was substituted for the 2A6. A high mutual conductance triode section with a high grid to cathode impedance was desirable. In all direct current amplifiers, the limiting factor that determines the minimum current flow which can be detected is the no signal grid current flow. All electrometer tubes are specially constructed to reduce this grid current flow, and many ordinary radio receiving tubes are superior to others in this respect. Theoretically, the circuit could be so balanced as to be unaffected by plate voltage variations, but practically, it was found necessary to use batteries for the plate and filament supplies instead of line voltage circuits. The galvanometer actually used in the circuit was a Rubicon multiple reflection type having a sensitivity of about 10^{-8} amperes per mm. deflection. The warm up period for the circuit was approximately one-half hour, during which time the meter indication would drift and have to be reset. About 200 volts was used for the plate supply, and a six volt Edison cell furnished heater current. The grid input lead from the centrifuge pickup probe had to be carefully shielded or it would act as an antenna and pick up 60 cycle hum. The metal shell of the 6SQ7 was grounded to shield against stray fields.

The second electronic circuit diagrammed in Figure 20 is the Ionization Guage and its associated amplifier. The power supply for the amplifier and the grid of the Ionization Guage is not shown in the Figure. It was actually a transformerless voltage doubler putting out about 220 volts d.c. The circuit was originally taken from Zworykin and Morton[15]

[15] Zworykin and Morton, op. cit., p. 144

and modified to make use of tubes available in the laboratory. The Ionization Guage itself was constructed from the elements of a 10 Y triode. After a great deal of experimentation, it was deemed advisable to replace the delicate filament of the 10 Y with a more rugged, ribbon type filament as found in the 80 and 5U4G rectifier tubes. This combination of electrodes worked admirably.

The amplifier was of the negative feedback variety making use of a cathode resistor to stabilize its operation and minimize the effects of tube aging. The meter was an inexpensive 0 - 1 ma. milliammeter which measured the total cathode current of the 6AG5. The circuit was zeroed for zero ion flow in the guage by means of the grid bias resistor. Of course the electron flow in the Ionization Guage had to be kept at a constant value for consistent vacuum indication. For high vacuum, that is, pressures below 10^{-3} millimeters of mercury, the reading of the guage was directly proportional to the pressure. The grid resistor used (10 megohms) was chosen for high vacuum work, but smaller resistors could be used to extend the range of the amplifier to higher pressures. The interior of the guage and all the electrodes had to be carefully degassed before pressure readings accurately reflected the pressure in the system. Electron bombardment and heating of the guage accomplished this within a few hours.

4. The Detection and Determination Process

As before, the analysis of an unknown gas mixture could be separated into two phases. The first phase of the process was identical with that of the electrostatic Ion Centrifuge in which the unknown sample was sealed within the tube at a low pressure. In the second, or electronic phase, the procedure was similar to that of the electrostatic case, but

differed in that the strength of the magnetic field was a measure of ionic mass. Gas molecules could be selectively ionized in the ion gun and then ejected through the gun nozzle into the U tube free space lying between the magnetic circuit pole caps. Only those ions having the requisite mass should move in a circle along the equilibrium orbit and strike the pickup probe. Heavy ions should move to the outer wall of the U tube and be neutralized there; light ions should be neutralized on the inner wall. What actually did happen in the case of the centrifuge tube of Figure 18 was that positive ions were prevented from flowing through the nozzle by the magnetic field. Evidently fringing flux of the pole caps bent the ions aside before they even reached the nozzle. This was graphic, experimental proof of the fact that ions must be created and accelerated within the magnetic field.

Assuming for the moment that ions were properly created and accelerated in the field, the four steps previously cited as necessary to complete the electronic phase still hold--with the substitution of magnetic field current variation in place of rotating field voltage variation in the second step.

The question of sensitivity of the centrifuge to small quantities of gas might properly be discussed at this point. At the pressure of 10^{-6} millimeters of mercury which existed within the centrifuge, there were about 3×10^{10} molecules per cubic centimeter. Carbon monoxide concentrations as low as one part in ten thousand corresponded to one million molecules of carbon monoxide per cubic centimeter. If a million of these molecules were ionized each second, the current flow to the pickup probe would be of the order of 10^{-13} amperes, the minimum detectable current of the amplifier indicator just described. To increase sensitivity, either

the ionizing area or the length of ionizing path could be increased. Both these factors were limited by tube construction considerations. The transit time of the ions in making the circular trip from the ionizing anode to the pickup probe was of the order of 100 microseconds, which meant that ion life was fairly short. The reversible cycle of gas molecule to ion to gas molecule was rapid enough to provide a sufficiency of neutral molecules at all times.

The matter of resolving power in connection with a steady field magnetic centrifuge as described herein was interesting. If the equilibrium orbit of the centrifuge was an unstable orbit (and all physical reasoning indicated that it was unstable), the ordinary definition of resolving power might not apply. Yet even here there existed the idea of the discrimination between an ion that had exactly the right mass, velocity, and spacial positioning and other ions. One can roll a baseball around the top of a cracker barrel only if the ball is correctly positioned and moves at the proper speed. Surely there is an element of resolving power here, or would it more properly be called chance? At any rate, the mathematical discussion to follow will elaborate and perhaps elucidate the problem.

B. Mathematical Theory

1. The Steady Field Centrifuge

The basic equation of an ion of mass m and charge e moving with a constant velocity v in a uniform magnetic field of H oersteds is:

$$mv = \frac{Her}{c} \qquad (3)$$

where c is the velocity of light and r is the radius of the circular orbit.

If ions are to be injected into a magnetic field by means of an accelerating electric field, the relationship between the mass of the

ion and the velocity it attains is:

$$v = \sqrt{\frac{2eE}{m}} \qquad (4)$$

where E is the strength of the electric field in electrostatic units (1 e.s.u. = 300 volts). Eliminating v between equations (3) and (4) immediately shows that the orbital radius of an ion injected into a uniform magnetic field by means of an accelerating electric field varies directly with the square root of its mass.

$$r = \frac{c}{H}\sqrt{\frac{2E}{e}}\sqrt{m} \qquad (5)$$

Now, if it is at all possible, it would be most convenient if positive ions were separated in a linear fashion, that is, if the orbital radii of ions varied directly with their masses. If, in equation (3), the magnetic field H were no longer a constant but a function of the radius as below,

$$H = \frac{C}{\sqrt{r}} \qquad (6)$$

then substitution in equation (5) would yield the desired relationship:

$$r = \frac{2c^2E}{C^2e}\, m\,. \qquad (7)$$

Strictly speaking, what has just been done is invalid since equation (3) holds only for a uniform field. However, for any ion that enters the non-uniform magnetic field at a given value of radius, and has just the right mass and velocity to maintain that radius, the field does not effectively change and thus remains uniform. In this special case, then, equation (7) should be valid.

Assume for the moment that two magnetic pole caps have been so shaped as to create a radial field that varies inversely with the

square root of the radius. Also assume that a positive ion of mass m and charge e has been started off in this field at a radius of x_o with an initial velocity v_o in the positive y direction as shown in Figure 21. According to the Lorentz force equation for charged particles,

$$F = ma = eE + \frac{e}{c}(\vec{v} \times \vec{H}). \qquad (8)$$

The electric field, E, is zero here, and the magnetic field is directed along the negative z axis:

$$-H_z = \frac{C}{\sqrt[4]{x^2 + y^2}} \qquad (9)$$

since

$$r = \sqrt{x^2 + y^2} \qquad (10)$$

The initial conditions of the problem at time t = 0 become:

$x = x_o$, $y = 0$, $z = 0$; $\dot{x} = 0$, $\dot{y} = v_o$, $\dot{z} = 0$.

By definition,

$$\vec{v} \times \vec{H} = -i(\dot{y}H_z - 0), + j(\dot{x}H_z - 0), - k(0).$$

The z component is zero, thus

$$F_z = m\ddot{z} = 0.$$

Integrating, $m\dot{z} = A$

and $mz = At + B$.

At time t = 0, z = 0, therefore B = 0. Also at time t = 0, $\dot{z} = 0$, therefore A = 0, and as a result z = 0. This immediately tells us that the motion of the ions is confined solely to the xy plane.

For the x component:

$$F_x = m\ddot{x} = -\frac{e}{c}(\dot{y}H_z) \text{ or}$$

$$\ddot{x} + \frac{e}{mc}\frac{C\dot{y}}{\sqrt[4]{x^2 + y^2}} = 0. \qquad (11)$$

For the y component:

$$F_y = m\ddot{y} = +\frac{e}{c}(\dot{x}H_z) \text{ or}$$

$$y - \frac{e}{mc}\frac{C\dot{x}}{\sqrt[4]{x^2 + y^2}} = 0 \qquad (12)$$

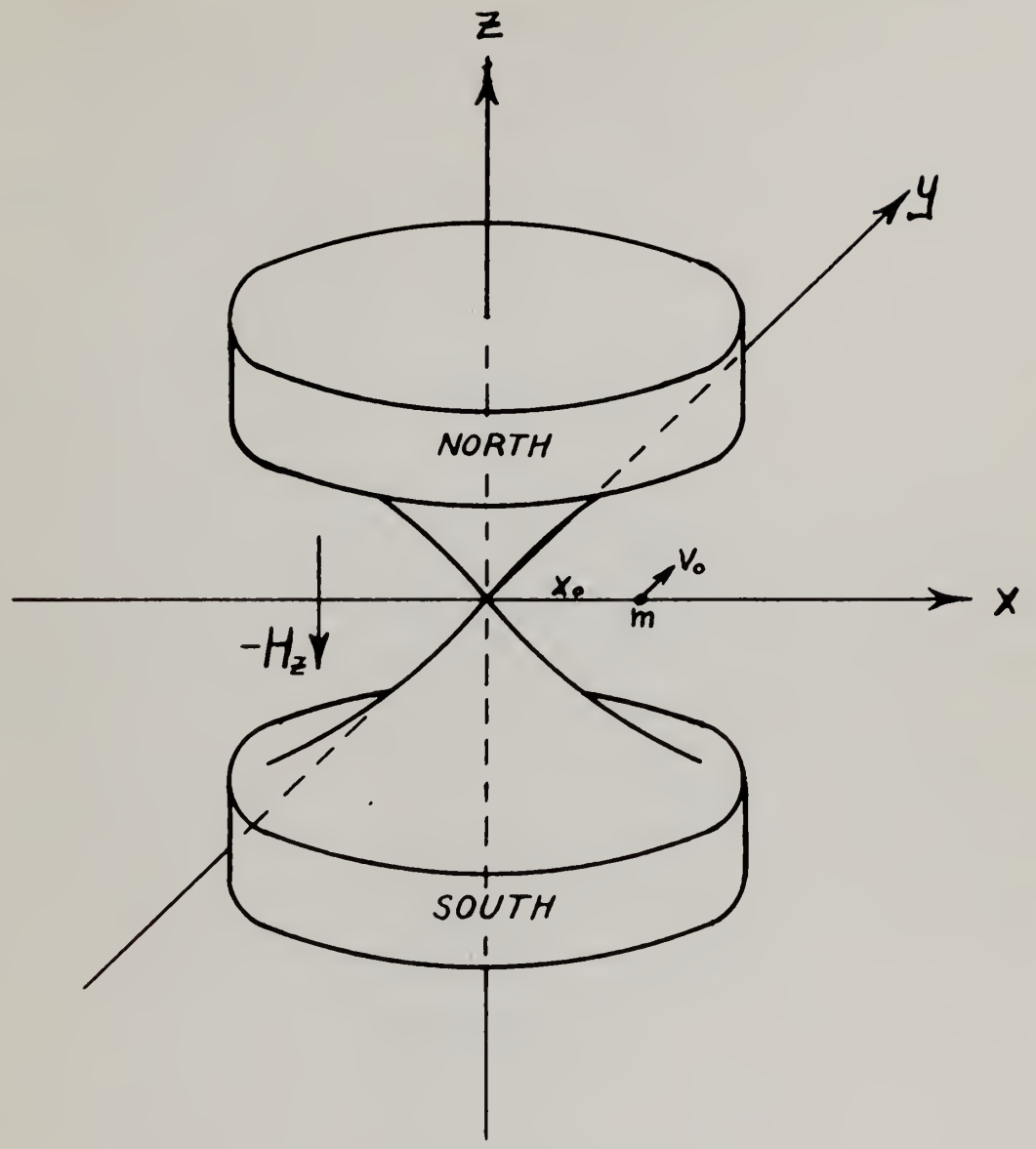

FIG. 21. Release of a Positive Ion in a Non Uniform Magnetic Field

Multiplying equation (11) by $\dot{x}$ and equation (12) by $\dot{y}$ and then adding the two equations, there results:

$$\ddot{x}\dot{x} + \ddot{y}\dot{y} = 0 . \qquad (13)$$

This equation can be integrated once directly:

$$\frac{1}{2}(\dot{x})^2 = -\frac{1}{2}(\dot{y})^2 + D \quad \text{or}$$

$$\dot{x} = \sqrt{2D - (\dot{y})^2} \qquad (14)$$

At time $t = 0$, $\dot{y} = v_o$, and $\dot{x} = 0$. Then $D = \frac{v_o^2}{2}$ and

$$\dot{x} = \sqrt{v_o^2 - (\dot{y})^2} \qquad (15)$$

The above mathematical expression cannot be readily integrated, yet a bit of study will reveal the trigonometric character of the radicand, which appears to be of the $1 - \sin^2$ or $1 - \cos^2$ form. As a trial solution, assume that

$$x = G \cos \omega t \qquad (16)$$

$$\text{and} \quad y = J \sin \omega t \qquad (17)$$

where the constants G, J, and ω are to be determined by the differential equations. Substituting in equation (15) there results:

$$-G\,\omega \sin \omega t = \sqrt{v_o^2 - (J^2\omega^2\cos^2\omega t)} .$$

Now, if $v_o^2 = J^2\omega^2$, then

$$-G\omega \sin \omega t = J\omega \sin \omega t \quad \text{and therefore}$$

$$-G = J = \pm \frac{v_o}{\omega} . \qquad (18)$$

The next step is to find the value of the constant ω in terms of the initial conditions and circuit constants. Return to equations (11) and (12) and set

$$\frac{eC}{mc} = k \qquad (19)$$

to obtain $\ddot{x} + \dfrac{k\dot{y}}{\sqrt[4]{x^2 + y^2}} = 0$

and $\ddot{y} - \dfrac{k\dot{x}}{\sqrt[4]{x^2 + y^2}} = 0$

Now, substitute values of x, $\dot{x}$, $\ddot{x}$, y, $\dot{y}$, and $\ddot{y}$ as listed below:

$$x = +\frac{v_o}{\omega} \cos \omega t$$

$$y = -\frac{v_o}{\omega} \sin \omega t$$

$$\dot{x} = -v_o \sin \omega t$$

$$\ddot{x} = -v_o\omega \cos \omega t$$

$$\dot{y} = -v_o \cos \omega t$$

$$\ddot{y} = +v_o\omega \sin \omega t \ .$$

The result of this substitution is the equation

$$\omega = \frac{k^2}{v_o} \ . \qquad (20)$$

Incidentally, at time $t = 0$, $x = x_o$, so that

$$\frac{v_o}{\omega} = x_o \ . \qquad (21)$$

The special solution of the steady field centrifuge equations can then be written as:

$$x = +x_o \cos \frac{k^2}{v_o} t \qquad (22)$$

$$y = -x_o \sin \frac{k^2}{v_o} t \ . \qquad (23)$$

These are the parametric equations of a circle having its center at the origin and a radius x_o, as can readily be ascertained by squaring and adding them to get:

$$x^2 + y^2 = x_o^2 \ .$$

The relationship between the radius of the circle, x_o, and the initial velocity, v_o, of the ion is obtained from equations (20) and (21):

$$x_o = \frac{v_o^2}{k^2} . \qquad (24)$$

It will be shown presently that the constant C of the magnetic field takes on different values as the current through the magnetic field coils is varied. In fact, $C = k_1 I$. Substituting for the constant k, equation (24) becomes

$$x_o = \frac{v_o^2 m^2 c^2}{k_1^2 I^2 e^2} \quad \text{or}$$

$$mv_o = \frac{k_1 e\sqrt{x_o}}{c} I . \qquad (25)$$

However, the velocity v_o is not a constant, but a function of the accelerating field voltage, E, and the mass of the ion as shown in equation (4). Substitution for v_o yields:

$$m = \frac{1}{2} \frac{k_1 e\ x_o}{c^2 E} I^2 \qquad (26)$$

Again, it is highly desirable to have a linear relationship between the mass of the ion and the current through the magnetic field coils. A simple method of accomplishing this is to make the accelerating voltage, E, directly proportional to the field current, I:

$$E = k_2 I . \qquad (27)$$

Equation (26) then becomes

$$m = \frac{1}{2} \frac{k_1^2 e\ x_o}{k_2 c^2} I \qquad (28)$$

Thus by simultaneously changing the field current and the accelerating voltage, ions of any mass can be made to coincide with the equilibrium orbit of radius x_0 in a linear fashion.

Equation (25) brings out the fact that ions having greater momenta, (mv_0), require greater equilibrium radii, x_0, provided that the coil current remains constant. Likewise, ions with smaller momenta require smaller equilibrium radii. To mathematically calculate the resolving power of the steady field centrifuge, it would be necessary to find a general solution to equation (15). Of course the resolving power could also be found experimentally from a working model of the centrifuge.

2. Solution of the Magnetic Field Problem

In the application of the Lorentz force equation, it was assumed that the non-uniform field of equation (6) had been created. The problem, then, was to create such a field, and a very definite mathematical technique was evolved for that purpose.

In the literature on magnetic circuits, it is empirically stated that air gaps in such circuits may conveniently be classified as "long" or "short". The short air gap is one in which the gap spacing nowhere exceeds one-fifth of the diameter of the pole face, assuming here a magnetic circuit of circular cross section as would be required for a radial field. For short air gaps the ordinary magnetic circuit equations are valid, while long air gaps become a field problem. In the case of the magnetic Ion Centrifuge, a short air gap is quite suitable, thus considerably simplifying matters.

Consider for the present the magnetic circuit illustrated in Figure 22, where the conical pole faces have a straight taper at an angle of α degrees. To find the flux distribution in such a radial field, the procedure would be as follows:

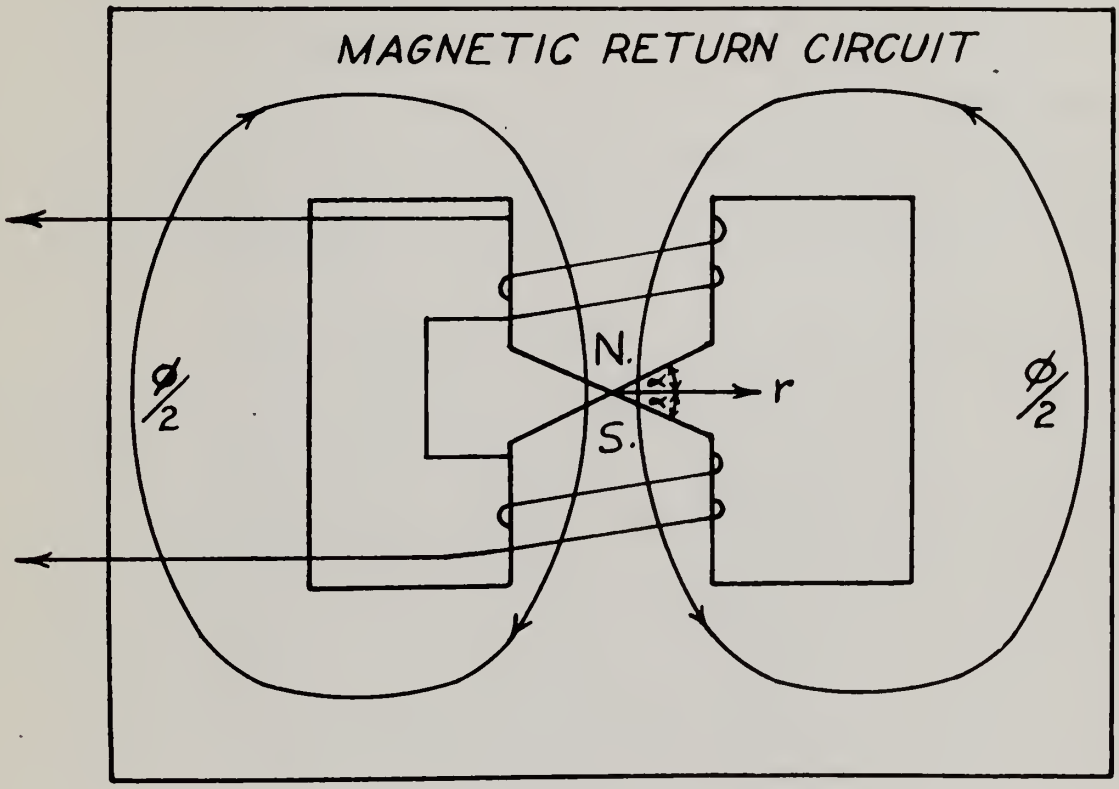

FIG. 22. Conical Pole Cap Magnetic Field Circuit

First make the assumption that all flux lines follow the iron and cross the air gap without refraction. Under this assumption, the flux densities in the iron and in the air gap are equal, and there is no flux leakage or fringing near the edges.

The second assumption is that the reluctance of the magnetic return circuit (in this case a parallel path of silicon steel laminations) is constant and negligible in comparison with the reluctance of the air gap.

Thirdly, and this is the key to the entire procedure, assume that the pole caps are constructed of an infinite number of insulated, infinitely thin, concentric cylinders as shown in Figure 23. The method of attacking the problem is to find the flux through each cylinder, and knowing the position of each cylinder, calculating the flux distribution. The total flux in the air gap can be found by integrating over the entire area. Physically, what this third assumption does is to break up a single flux path into a great number of parallel flux paths, which add up to give the original path. Just as a great number of parallel currents add up to give the total current in a multipath conductor, so to, many parallel fluxes add up to give the total flux. There should be no question as to the general validity of the method.

Mathematically, the first step is to calculate the reluctance of a typical pole cap cylinder air gap:

a. Cross sectional area, $A_k = 2\pi r_k dr \text{ cm}^2$

b. Length of air gap, $\ell_k = 2r_k \tan \alpha$

Then the reluctance, $\mathcal{R}_k = \frac{\ell_k}{\mu A_k} = \frac{\tan \alpha}{\pi dr}$ since $\mu = 1$ for air. The flux in this k^{th} cylinder due to a magnetomotive force of $0.4\pi NI$ is:

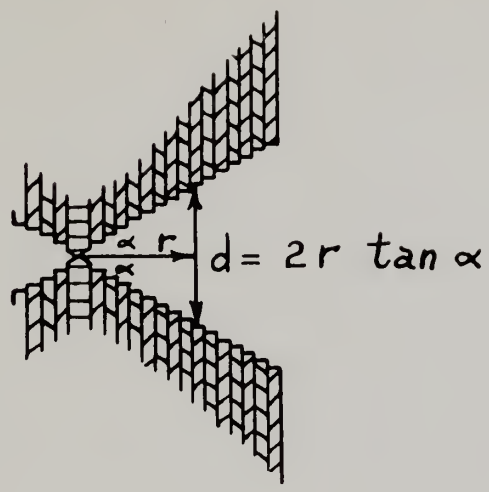

CROSS SECTION OF CONICAL POLE CAPS

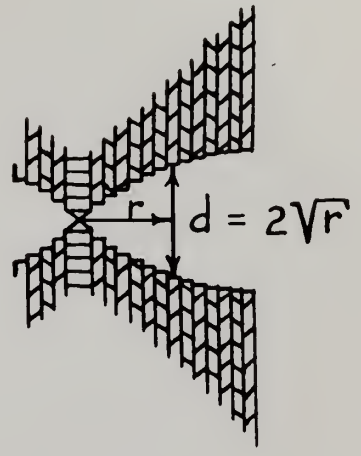

CROSS SECTION OF PARABALOIDAL POLE CAPS

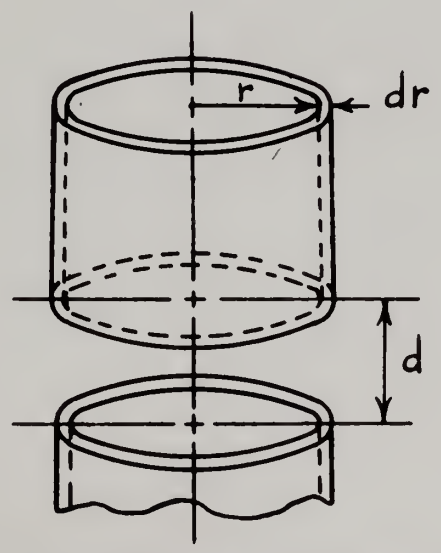

DETAIL OF AN INDIVIDUAL CYLINDER

FIG. 23. Assumed Construction of Conical and Parabaloidal Pole Caps

$$\phi_k = \frac{0.4\pi^2 NI\ dr}{\tan \alpha}$$

The flux density in the air gap of the kth cylinder is:

$$B_k = H_k = \frac{\phi_k}{A_k} = \frac{0.2\pi NI}{\tan \alpha\ r_k}$$

This indicates that the field in the air gap of the kth cylinder is inversely proportional to the radius of that cylinder, that is, $H \propto \frac{1}{r}$. It can be shown that this result is correct by considering a circular arc as the true flux path in a conical pole cap air gap.[16] Evidently the method of infinitely thin cylinders is a justifiable approximation. The constant $\frac{0.2\pi NI}{\tan \alpha}$ is not exactly correct because of the first two assumptions of this procedure, but it is a good approximation to within a few per cent, especially at interior points of the field.

Since a field of the form $H \propto \frac{1}{\sqrt{r}}$ is desired, the shape of the pole caps will have to be changed. To find the required shape, merely work backwards from the desired result:

$$H_k = \frac{C}{\sqrt{r_k}}$$

$$\phi_k = A_k H_k = 2\pi r_k dr \frac{C}{\sqrt{r_k}}$$

$$\mathcal{R}_k = \frac{0.4\pi NI}{\phi_k} = \frac{0.2\ NI}{\sqrt{r_k}\ dr\ C}$$

$$\ell_k = \mathcal{R}_k A_k = \frac{0.4\pi NI}{C}\sqrt{r_k}$$

The geometrical shape that gives rise to a relationship such as this is the parabola shown in Figure 23, in which

$$\ell = 2\sqrt{r}\ .$$

[16] Herbert C. Rotors, Electromagnetic Devices. (New York: John Wiley and Sons, Inc., 1941), p. 117.

The constant C is then found to be

$$C = 0.2\pi NI = k_1 I \qquad (29)$$

where N is the number of turns in the magnetic coil windings and I is the coil current in amperes.

To find the total flux within the paraboloidal air gap, sum up all the individual cylinder fluxes:

$$\phi = \sum_{k=1}^{n} \phi_k$$

As n approaches infinity and the thickness of the cylinders approaches zero, the limiting sum becomes the integral

$$\phi = \int_0^R \phi_k = \int_0^R 0.4\pi^2 NI\sqrt{r}\, dr = \frac{0.8}{3}\pi^2 NIR^{3/2} \qquad (30)$$

The total flux within an orbit of radius R is directly proportional to the 3/2 power of that radius.

The shape of the pole caps to give the desired magnetic field has now been determined to a close approximation. It may be possible to obtain an exact mathematical expression for the permeance of the air gap by considering the true flux paths in the gap to be segments of parabolas orthogonal to the pole cap surfaces. However, at the time it was deemed sufficient to test the approximation by the actual construction and measurement of the magnetic circuit. Such phenomena as leakage and fringing would affect the field distribution in spite of the exactitude of mathematical calculation, and there was no point in attempting to find a more accurate mathematical solution.

3. The Time Varying Field Centrifuge

In the theory of the magnetic induction accelerator, better known as the Betatron, Dr. Kerst has shown that a stable equilibrium orbit existed for accelerated electrons in a radial magnetic field subject

to the following conditions:

a. $H \propto \frac{1}{r^n}$ for $0 < n < 1$

b. The magnetic field varied in time to produce a tangential electric field.

c. Electrons were created within the field and were injected tangent to the equilibrium orbit at a definite velocity just as the magnetic field passed through zero and began to increase.

Considering equation (3), it seemed reasonable that an ion or electron moving in a circle of radius r would continue to move in that circle if both the field, H, and the momentum, mv, were increased or decreased at the same rate. In the Betatron, an alternating 600 c.p.s. current in the field coils created a time varying field which, in turn, produced a tangential electric field. It was this electric field which accelerated electrons to extremely high velocities so that the relativistic mass of the electron changed, and the product of mass times velocity, mv, had to be considered a variable. In the Ion Centrifuge, high velocities were not desired. At speeds of the order of 10^5 to 10^6 centimeters per second, the masses of electrons and ions were considered as being constant.

What would be desired in the case of a time varying field centrifuge would be either a condition of stable equilibrium for ions of a given mass or else the simultaneous existence of a number of separate, stable equilibrium orbits for ions of different mass. The mathematical equations associated with a time varying field centrifuge are extremely complicated and have not as yet been completely solved. There is reasonable doubt concerning the proper shape of the magnetic field and the nature of the field variation to give the desired results.

Preliminary calculations have shown that ions cannot be continuously injected into a time varying field, but must be pulse injected at the same point of the field variation. Another feature of such a system would be the necessity for a direct current component of field current greater than the amplitude of the varying current component so that the direction of the magnetic field would never reverse and ions would rotate continuously in the same direction. The varying component of current would velocity modulate the ion flow, and it is this velocity modulation which would be detected by the pickup loop.

One interesting aspect of a time varying field centrifuge would be its ionization-deionization characteristic. During operation, the centrifuge tube would comprise a closed system containing a given number of molecules. These molecules (10^{10} per cubic centimeter) would be constantly ionized and forced into motion. If the ion gun structure is so arranged as to prevent electrons from escaping, a shortage of free electrons would inevitably result in the free space section of the tube. As a consequence, deionization of positive ions would become negligible, and practically all neutral molecules would become positive ions. Such a saturation process would be highly desirable from the point of view of sensitivity.

Until the mathematical theory of the time varying field centrifuge has been entirely worked out, little more can be said about it. Fortunately, the complete electronic gas detection system could be studied in regard to the steady field centrifuge tube. Such a tube was actually built, and the entire system was set up in the laboratory. The next section will describe the construction details of all the system components.

IV. ENGINEERING DESIGN FOR AN EXPERIMENTAL MAGNETIC ION CENTRIFUGE GAS DETECTION SYSTEM

A. Individual Component Design

1. The Magnetic Circuit

Figure 17 and Engineering Sketches 1 through 12 should give the reader a good idea of the magnetic circuit construction. The outer shell or frame of the circuit was built up of silicon steel laminations which overlapped at the corners and were held in place by corner bolts. The two magnetic shell brackets kept the laminations together in the central section of the shell and also served to center the pole cap bolts. The pole piece assemblies had two chief functions:

a. To provide laminated, magnetic transition sections between the magnetic shell and the pole caps;

b. To provide space for winding the field coils.

The coil form was made of brass, but could have been made of any non-ferrous material. The magnetic laminations were short lengths of soft iron wire, preferably enamelled or insulated in some fashion. These wires were packed tightly in the region between the inside of the coil form and the outside of the central brass pole cap bolt sleeve. A combination of molten rosin and tar was poured over the laminations to act as a binding agent and exclude air and moisture. The ends of the wire laminations were ground flat, after which the entire pole piece assemblies were turned on a lathe to render the top and bottom parallel and polish these surfaces smooth. The brass coil form was insulated by means of cambric cloth, and the coils were wound as illustrated in Sketch No. 10. Fine spaghetti was used to prevent the buried coil end from shorting against adjacent turns. The wire size chosen, B and S #22, was a compromise intended to give maximum ampere turns with a minimum heating effect.

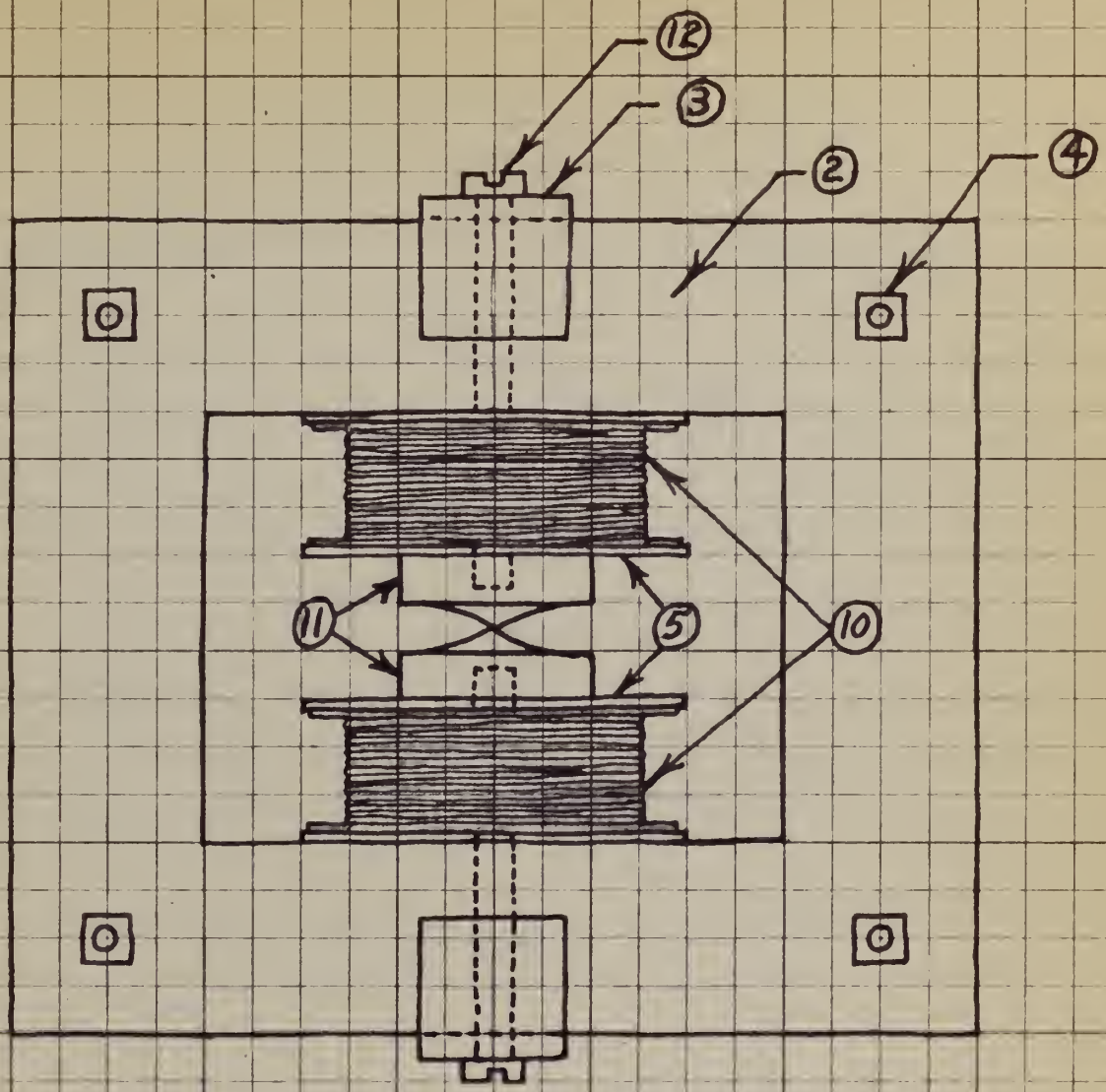

Circled Numbers refer to Detail Sketches

Sketch No. 1 Magnetic Circuit Assembly

EUGENE DIETZGEN CO.
MADE IN U.S.A.
NO. 340-4 DIETZGEN GRAPH PAPER
4 X 4 PER INCH

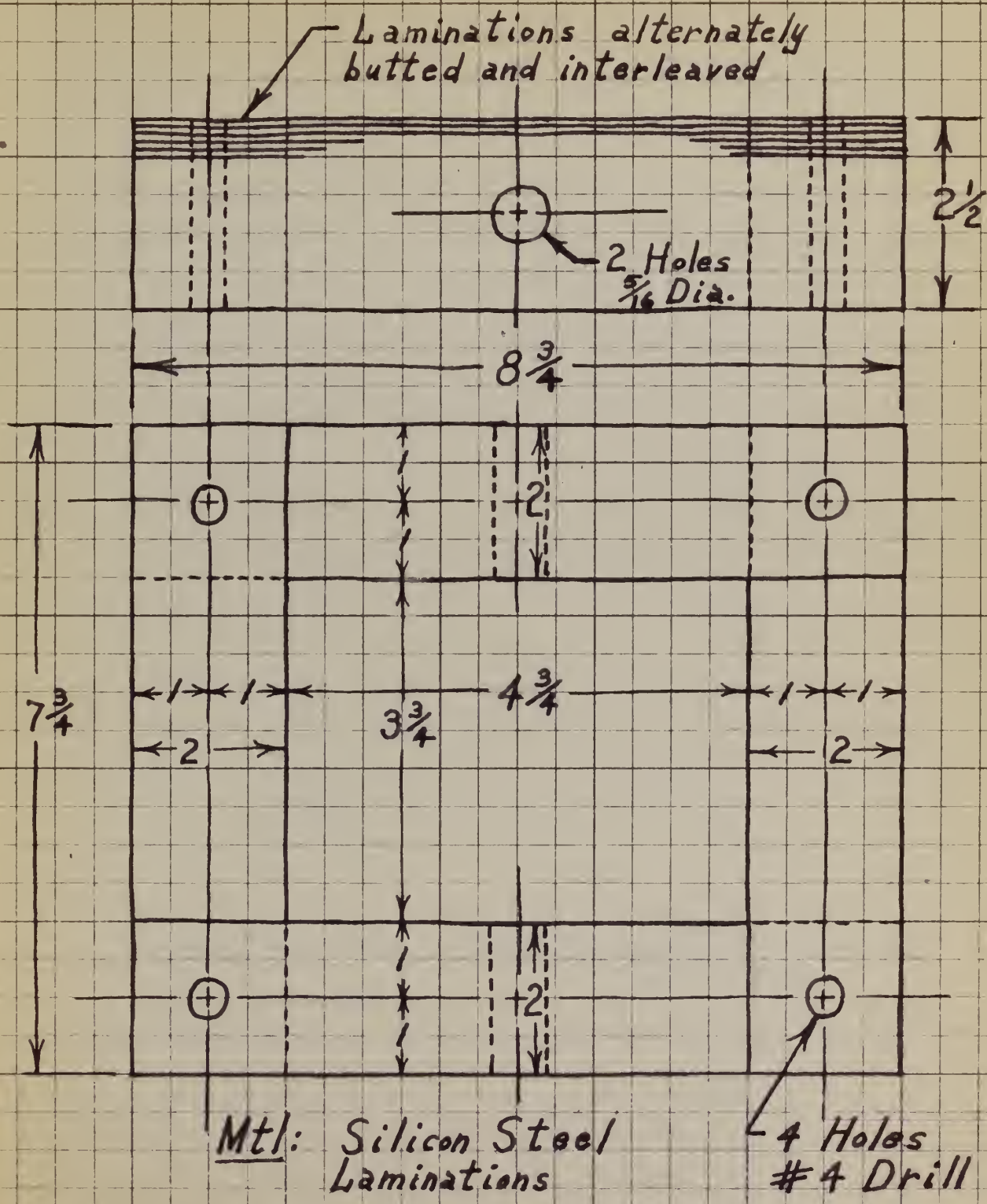

Mtl: Silicon Steel Laminations

Sketch No. 2 Magnetic Shell

EUGENE DIETZGEN CO. MADE IN U.S.A.
NO. 340-4 DIETZGEN GRAPH PAPER 4 X 4 PER INCH

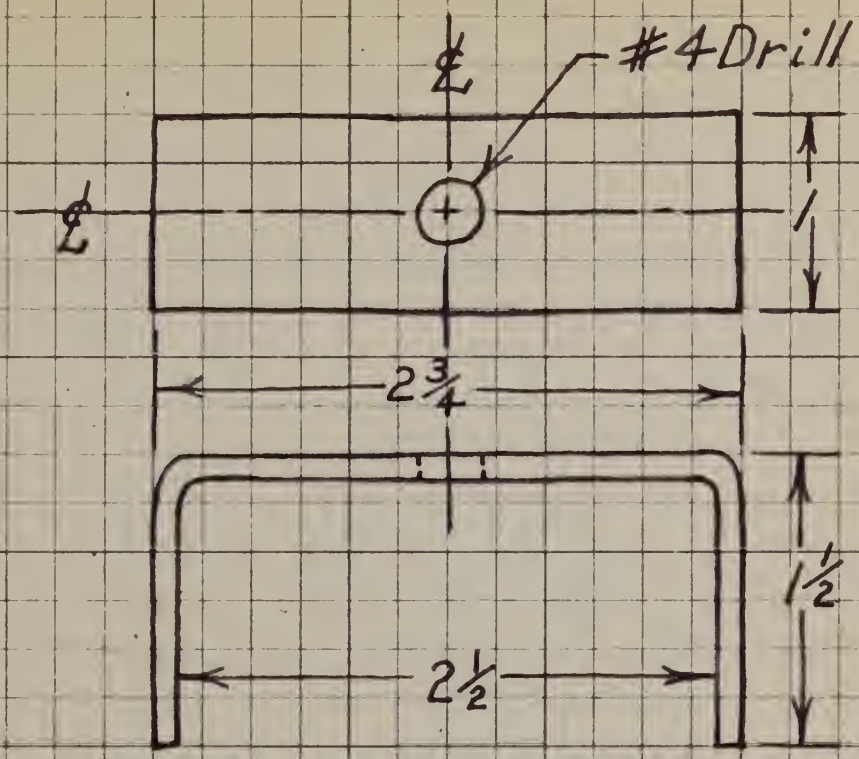

No. Req'd: 2

Mtl: 1/8 Iron Strap

Sketch No. 3 Magnetic Shell Bracket

EUGENE DIETZGEN CO.
MADE IN U.S.A.
NO. 340-4 DIETZGEN GRAPH PAPER
4 X 4 PER INCH

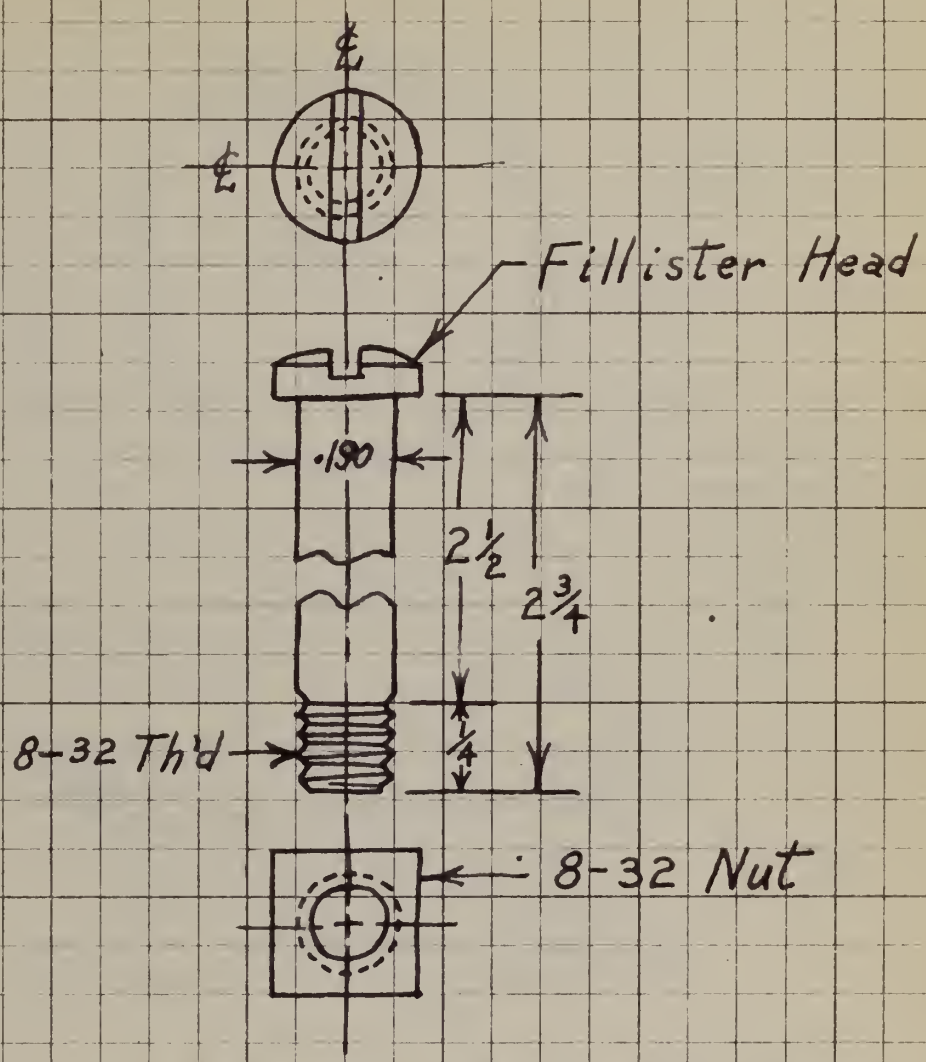

No. Req'd: 4 of Each

Mtl: C.R.S.

Sketch No. 4 Magnetic Shell Bolt and Nut

EUGENE DIETZGEN CO.
NO. 340-4 DIETZGEN GRAPH PAPER
4 X 4 PER INCH

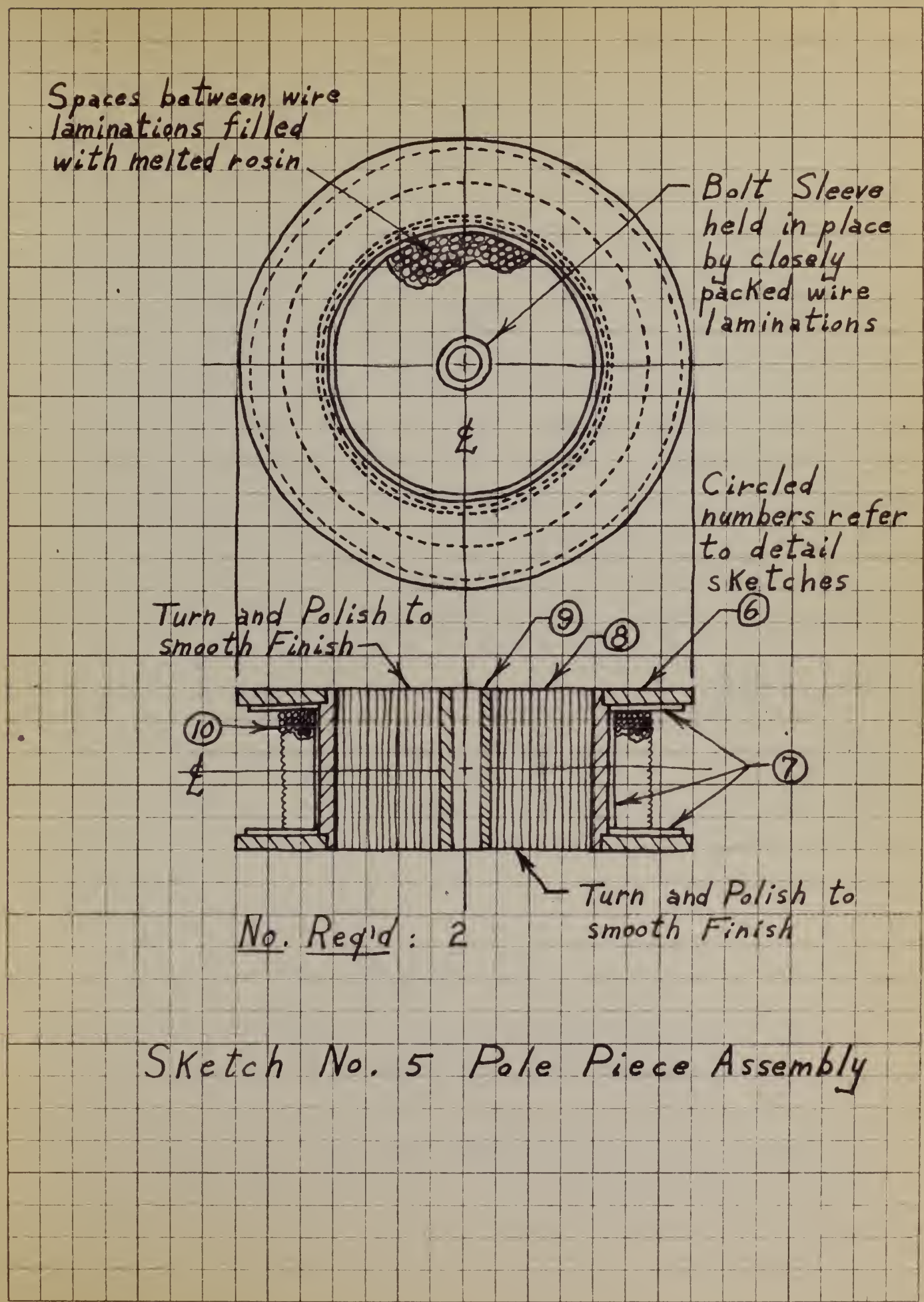

Sketch No. 5 Pole Piece Assembly

EUGENE DIETZGEN CO MADE IN U.S.A.
NO. 340-4 DIETZGEN GRAPH PAPER 4 X 4 PER INCH

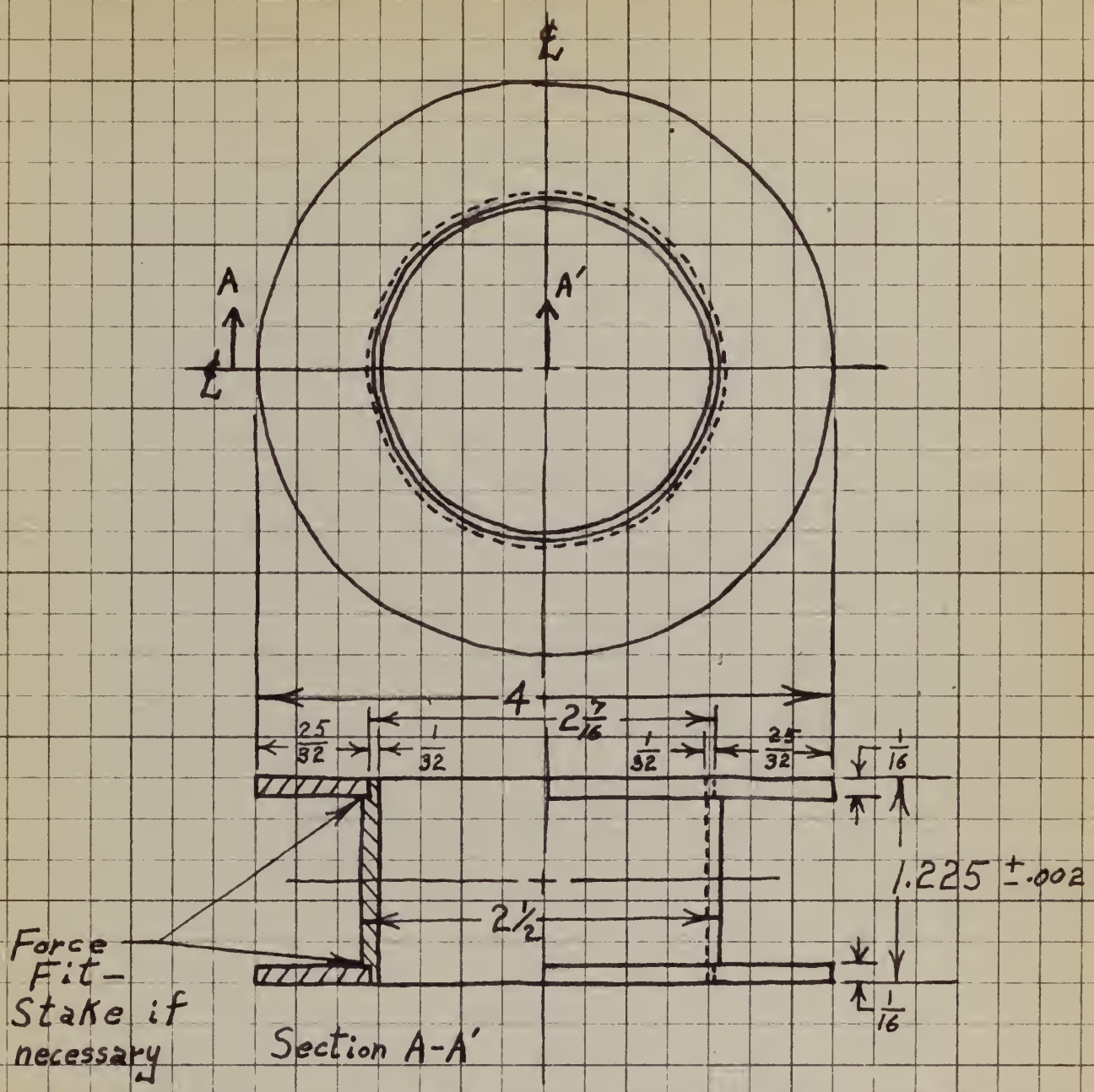

No. Req'd: 2

Mtl: 2 1/2 O.D. 1/16 Wall Brass Tubing and 1/16 Thick Sheet Brass

Sketch No. 6 Pole Piece Coil Form

EUGENE DIETZGEN CO. MADE IN U.S.A.
NO. 340-4 DIETZGEN GRAPH PAPER 4 X 4 PER INCH

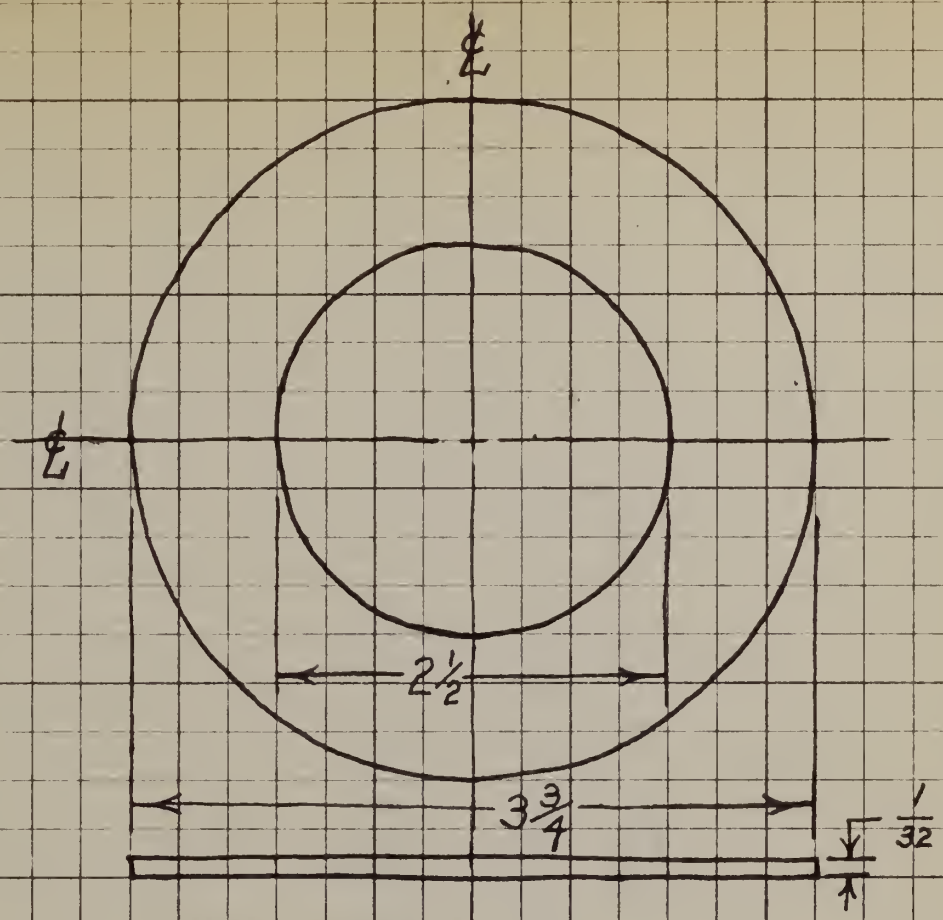

Insulation A.
Mtl: Bakelite

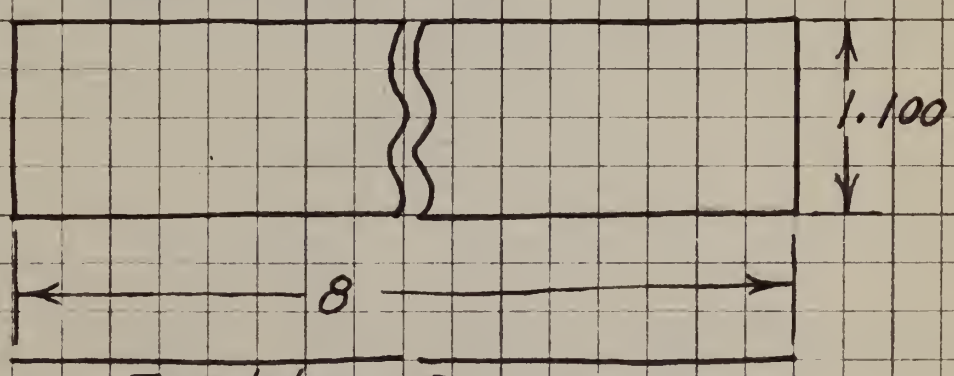

Insulation B
Mtl: Cambric Cloth

No. Req'd: 4 of A, 2 of B

Sketch No. 7 Coil Form Insulation

EUGENE DIETZGEN CO. MADE IN U.S.A.
NO. 340-4 DIETZGEN GRAPH PAPER 4 X 4 PER INCH

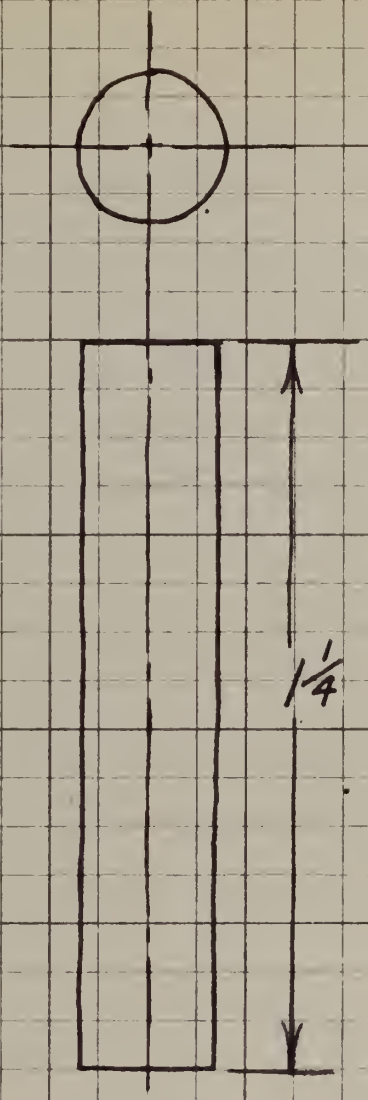

No. Req'd: Several Thousand (about 2,000)

Mtl: Enamelled Soft Iron Wire
approx. S.W.G. # 14

Sketch No. 8 Pole Piece Wire Lamination

EUGENE DIETZGEN CO
NO. 340 4 DIETZGEN GRAPH PAPER
4 X 4 PER INCH

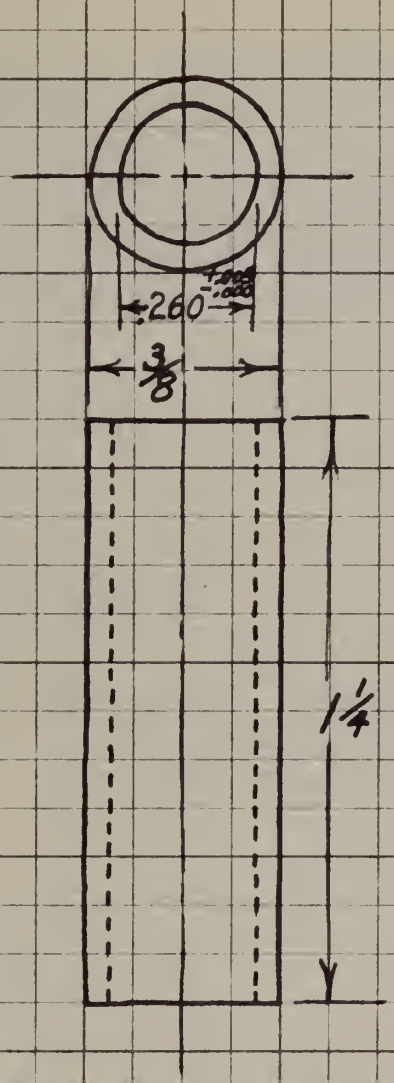

No. Req'd: 2

Mtl: Brass or Soft Iron

Sketch No. 9 Pole Piece Bolt Sleeve

EUGENE DIETZGEN CO.
MADE IN U.S.A.
NO. 340-4 DIETZGEN GRAPH PAPER
4 X 4 PER INCH

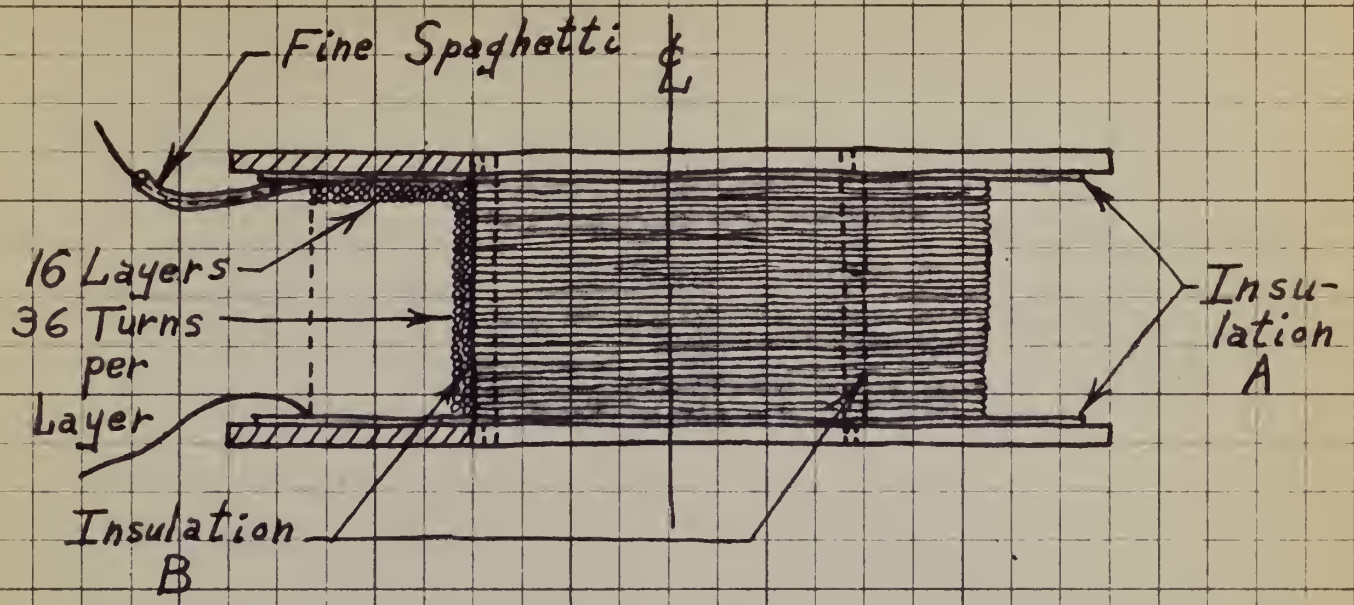

No. Req'd: 2

Mtl: Approx. 1 Lb. B.&S. #22 Enamelled Copper Wire for each Pole Winding

Note: The Pole Piece Coil Form is first insulated with Insulation A and B. Each coil is wound with 575 turns of wire as illustrated. Nominal Resistance of each coil should be 7.00 ohms.

Sketch No. 10 Pole Piece Winding Data

EUGENE DIETZGEN CO. MADE IN U.S.A.
NO. 340-4 DIETZGEN GRAPH PAPER 4 X 4 PER INCH

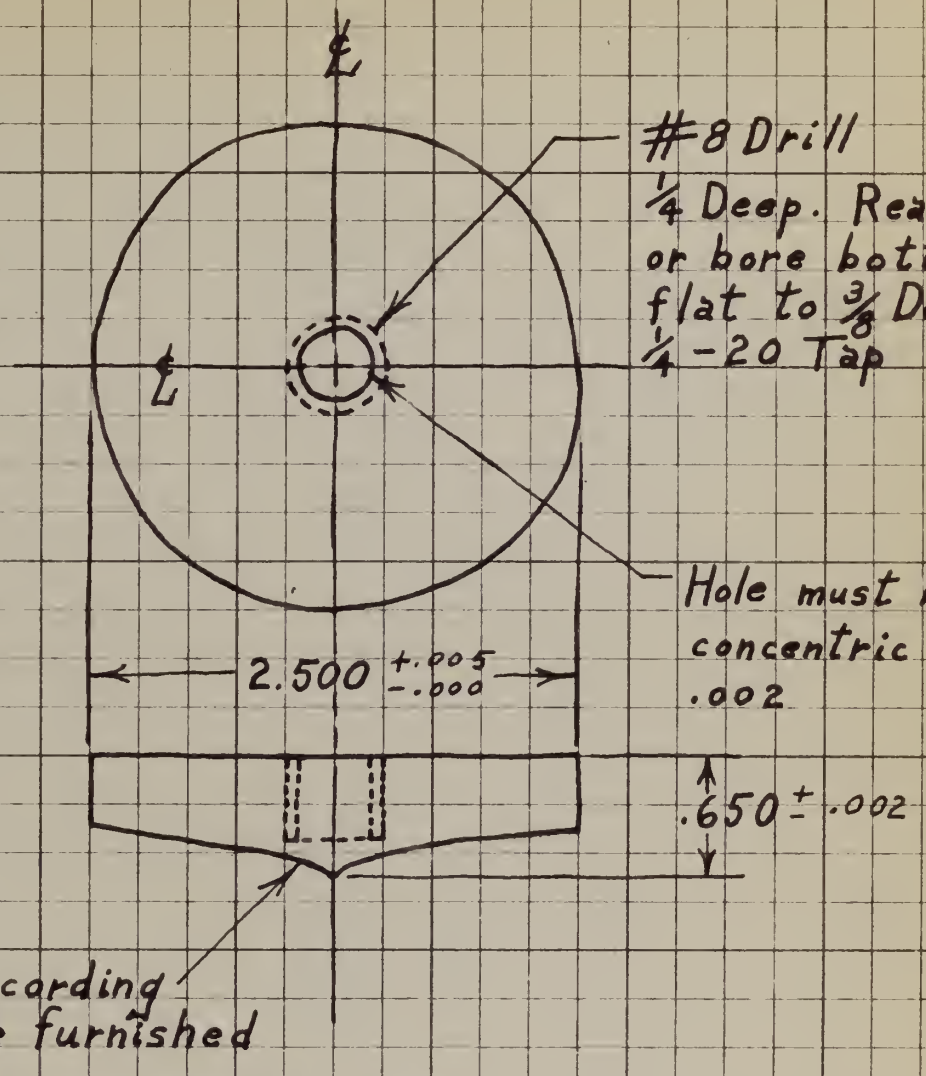

No. Req'd: 2

Mtl: Soft Iron

Finish: Polish

Sketch No. 11 Pole Cap

EUGENE DIETZGEN CO. MADE IN U.S.A.
NO. 340-4 DIETZGEN GRAPH PAPER 4 X 4 PER INCH

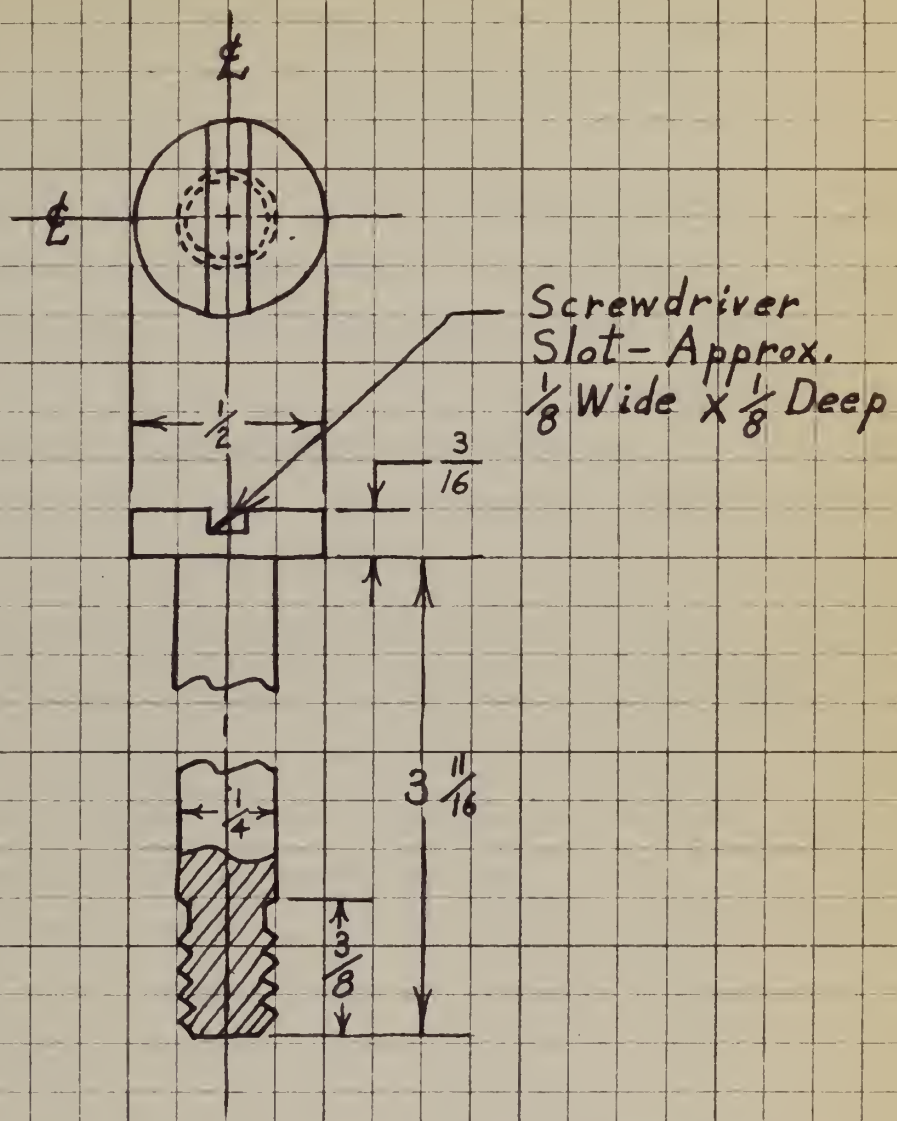

No. Req'd: 2

Mtl: Soft Iron

Sketch No. 12 Pole Cap Bolt

EUGENE DIETZGEN CO. MADE IN U.S.A.
NO. 340 4 DIETZGEN GRAPH PAPER 4 X 4 PER INCH

The coils were found to safely carry up to five amperes, giving a safe maximum of about 5,000 ampere turns. Under these conditions, the magnetic field between the pole caps varied from about 1,500 gauss at the edge of the field to over 5,000 gauss at the center.

The pole caps were made of soft norway iron and were very carefully machined and polished. The method used to cut the parabolic surfaces was a cut and try process. An accurately shaped cardboard gauge representing a cross section of the pole cap to be cut away was furnished to the machinist. The gauge was prepared from a mathematical plot on fine graph paper of the desired curves. The accuracy with which the experimental pole caps were cut is partly reflected in the graph of Figure 24. This graph shows the actual measured variation of magnetic field with radius as constrasted with the ideal, theoretical relationship. For any sort of commercial production, pole caps would be cast by the lost wax method rather than machined. There are many alloys available today which have good magnetic properties and can be cast.

Figure 25 shows the variation of magnetic field with coil current. The curves are not too accurate because of the manner in which the data were taken. A bismuth spiral was used to measure the magnetic field. Positioning of the spiral in the field was accomplished by means of a screw feed device. The method used to measure the field was this: Coil current was set at its highest value of five amperes and the bismuth spiral was moved into the field, a reading of field strength being taken every tenth of an inch along the radius. The current was decreased in steps of one ampere and the process repeated. More accurate data could have been obtained by leaving the position of the spiral fixed while the current was increased in steps of one ampere to its maximum value of five amperes.

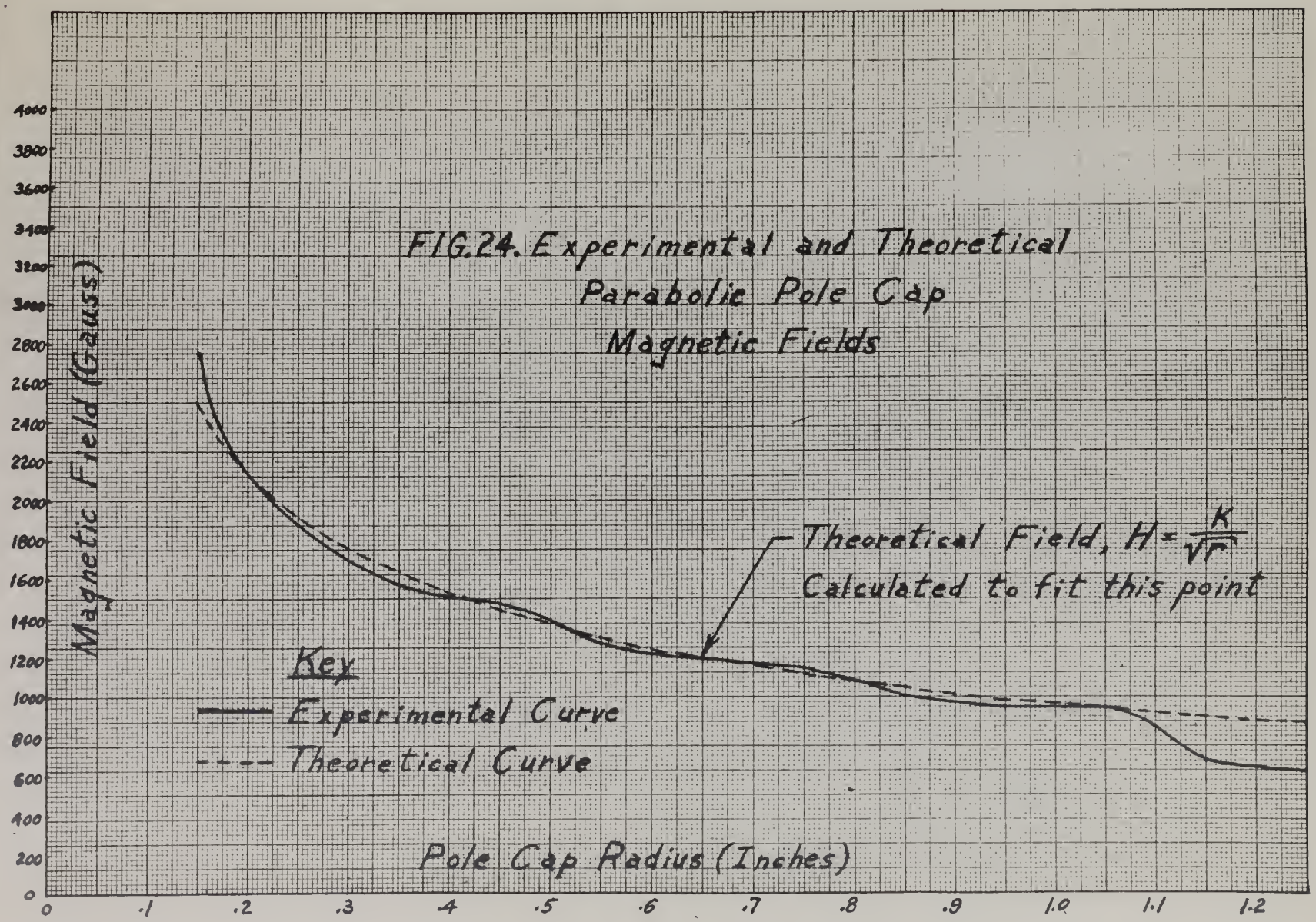

FIG. 24. Experimental and Theoretical Parabolic Pole Cap Magnetic Fields

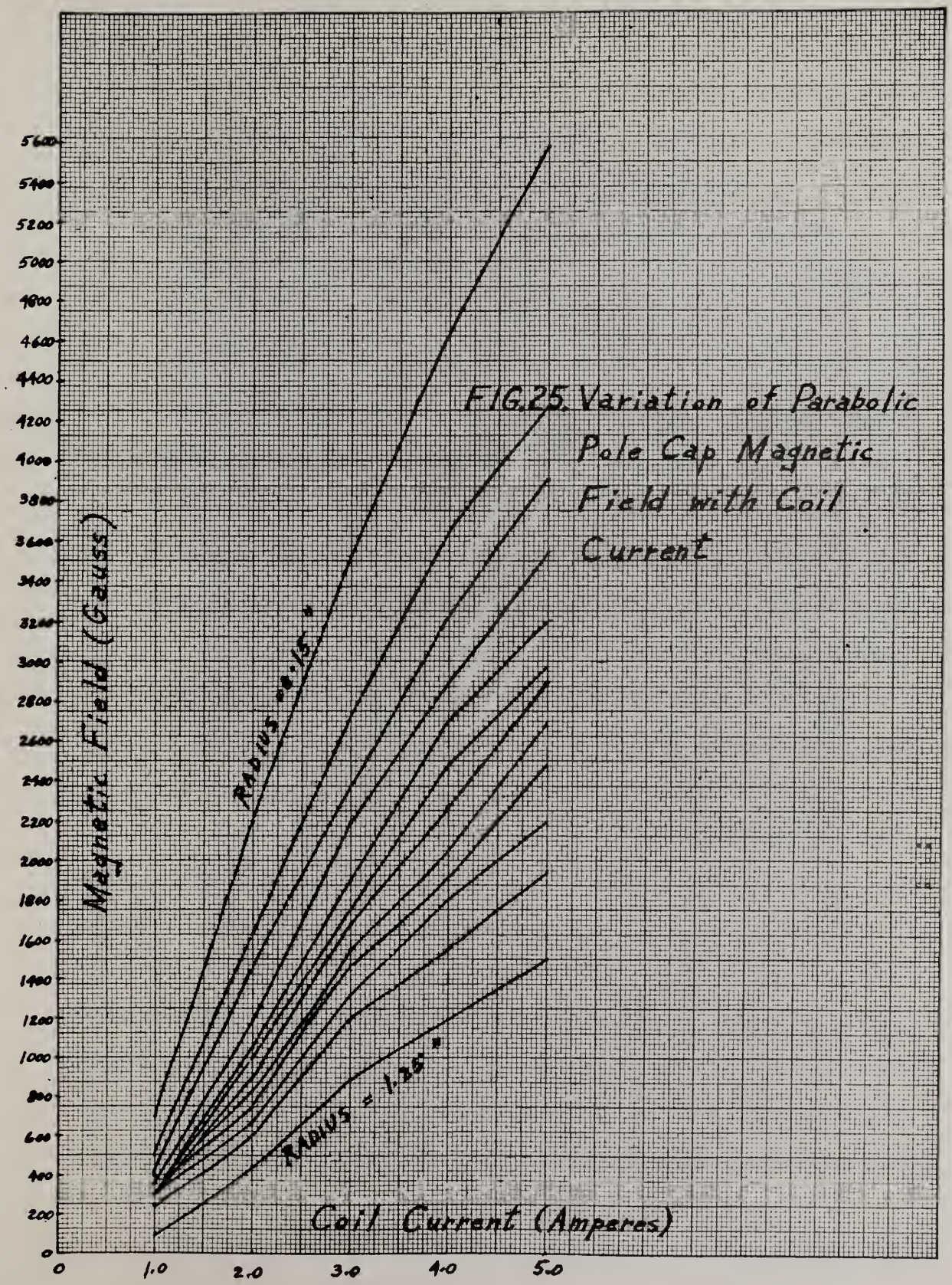

FIG.25. Variation of Parabolic Pole Cap Magnetic Field with Coil Current

2. The Ion Centrifuge Tube

Appropriately enough, the heart of the electronic gas detection system was the most difficult component to construct. Two unsuccessful centrifuge tube models preceded the first partially successful model illustrated in Figure 18. The first two models were made of brass with electrical connections being brought into the tube via special metal to glass vacuum tight seals. In spite of all that could be done, neither tube would hold a high vacuum, and it was impossible to find the leaks in the metal with the laboratory equipment available. One solution was to dip the entire tube in molten zinc, but this would have loosened soldered joints. It was found necessary to use soft solder rather than silver solder as the metal to glass feed-through assemblies could not stand the high temperature needed for silver solder. A great many of the so-called non-porous lacquers, such as Glyptal and Duco Cement, were tried unsuccessfully. Special sealing waxes like DeKhotinsky could not be used as the temperature of the ion gun structure would soften them. In general, an experimental metal centrifuge tube was found impracticable.

At this point, the friendly Chemistry Department and my friend, Richard Blair, came to the rescue. Mr. Blair made the centrifuge tube illustrated in Figure 18 wholly out of pyrex. Tungsten wires 0.050 inches in diameter were sealed through the pyrex for electrical connections, and the outer ends of the tungsten wires were beaded with nickel to eliminate leakage. The inside of the free space U tube was coated with a suspension of microfine graphite in water as was the equalizer tube. The cathode was an oxide coated nickel ribbon filament taken from an 80 rectifier tube. Bent in the form of a circle, it was spot-welded to two nickel wires diametrically opposite one another, and these nickel wires

were spot-welded to the tungsten feed-through wires. The central, brass anode cylinder was about one-quarter inch in diameter and was silver soldered directly to its tungsten lead-in wire. The pickup probe was a tungsten T with the short horizontal section acting as the probe while a coating of glass served to electrically insulate the vertical stem. External connections to the tungsten leads were made through intermediate sections of nickel wire spot-welded to the tungsten.

3. Electric and Electronic Circuits

Electric circuits used in the system were chiefly direct current battery circuits as illustrated in Figures 17 and 20. The heater circuit for the mercury diffusion pump operated from line voltage through a standard Variac. A 1000 watt heater cone of the type used with parabolic metal reflectors was modified for use as a pump heater. The outer walls of the cone containing the nichrome winding were coated with asbestos to keep the heat within the cone. The method of doing this was to mix water and powdered asbestos to a heavy paste consistency and then smearing on the paste where desired. The water evaporated from the mixture after about twenty-four hours of ordinary air drying leaving a solid, homogeneous coating of asbestos.

All the circuits shown grounded in Figure 20 were connected to the water pipe system of the laboratory; in particular, the metal vacuum rack, the chassis of the amplifier indicator and Ionization Guage amplifier, and the magnetic shell were grounded by means of heavy wire braid. The many transformers used for supplying filament voltages were war surplus transformers having a variety of secondary voltages. All high voltage terminals were carefully insulated with rubber tape. The magnetic field coil current switch, the centrifuge tube filament switch, and the Ionization

Guage filament switch were all of the knife blade variety and were rigidly mounted on the wooden frame of the vacuum rack. Wire connections in the magnetic field coil circuit were made with heavy auto ignition wire to reduce heating losses.

The power for the Ionization Guage and its amplifier was provided by a voltage doubler circuit using selenium rectifiers. The a.c. line voltage cord and plug were polarized so that the chassis was connected to the grounded side of the line voltage. Rectified current from the doubler circuit was filtered by a simple capacitance resistance filter to furnish the B+ shown in Figure 20. Both the Ionization Guage amplifier and the amplifier indicator were mounted on a single chassis, which also housed the voltage doubler circuit. The two amplifier circuits have already been described in some detail. B+ voltage variations of the doubler did not deflect the Ionization Guage readings noticeably. The Rubicon amplifier indicator galvanometer was very sensitive to mechanical vibrations and had to be mounted on four squares of soft sponge rubber.

4. The High Vacuum and Gas Generating Systems

The entire high vacuum and gas generating systems illustrated in Figures 5 and 6 and described generally on pages 15, 18, and 19 were designed and constructed by Mr. Richard Blair, who even went so far as to make the mercury diffusion pump, the Ionization Guage, the McLeod Guage, the closed end manometer, the carbon monoxide generator, and the freezing-out traps. The proper design of a mercury diffusion pump or a McLeod Guage alone would constitute a thesis, and it is not the writer's purpose to explain the theory of these units. In glass blowing, there are certain things one can do with glass and certain things one cannot do. There does exist a most efficient method of joining any two components

of a high vacuum system, and the very nature of glass makes this possible. Bends, turns, and constrictions are to be avoided in a high vacuum system; stopcocks and tapered joints must be judiciously chosen for size and location. The expert glassblower thinks of his glass circuits much as an electronic engineer thinks of his circuits: Tubing size determines the rate of flow much as resistors determine rate of flow. Safety traps, spray traps, and bulbs provide storage space much as condensers, while the location of units above or below one another is analogous to electrical potential. The idea of series and parallel circuits is also similar in the two arts, and a freezing-out trap corresponds to an electrical filter. But enough of this! The point to be brought out is that it takes an experienced glassblower to construct an efficient high vacuum line.

The forepump used on the high vacuum line was a Cenco Megavac pump. Occasionally it was necessary to add oil to it as a certain amount of oil was thrown out through the top cover by the pumping action. The original top of the pump had been removed and a special tubulated top constructed to carry off exhaust gases to a nearby hood. In this way, discharge of carbon monoxide into the laboratory was avoided. The entire unit of pump and electric motor was mounted on four squares of sponge rubber to minimize vibration of the bench top and vacuum rack. Short lengths of rubber tubing between the forepump and the safely trap and the mercury pump and the safety trap isolated forepump vibrations from the glass system.

The vacuum rack was constructed of half-inch pipe, so bent and welded as to form a grid arrangement. This metal structure was enclosed in a framework of heavy fir 2 x 4 inch beams to give it weight

and rigidity. The photograph of Figure 26 shows the vacuum rack and the mounting of the various components of the vacuum and gas generating systems.

The freezing-out trap utilized an open mouth thermos filled with a mixture of dry ice and trichlorethylene. The supply of dry ice had to be replenished about every twenty-four hours. For best results, it was essential to clean out the trap every week or two and to regrease all the stopcocks in the system. For better high vacuum operation, liquid nitrogen at -190° centigrade should be used in the thermos. Be sure to chill the thermos with dry ice before filling it with liquid nitrogen as a 200° centigrade thermal shock may break the dewar seals.

All glass components of the system were rigidly held in place by adjustable clamps fastened to the rack. Before being clamped in place, the glass would be wrapped with wet asbestos tape and the adjustable jaw of the clamp fastened over the tape. The stem of the clamp would then be secured to the rack in such a way as to eliminate strain.

5. Overall System Assembly

The magnetic circuit and Ion Centrifuge tube were mounted on a special stand located in the center of the vacuum rack. The vacuum rack itself was securely clamped to the top of the laboratory bench and the mechanical forepump was located just to the left of the rack. Most of the electric and electronic equipment was placed either behind or to the right of the rack. Figure 26 illustrates the general arrangement of components. If the electronic circuits had been mounted beneath the magnetic circuit at the base of the rack, the entire gas detection system, with the exception of the mechanical vacuum pump and the Edison cells,

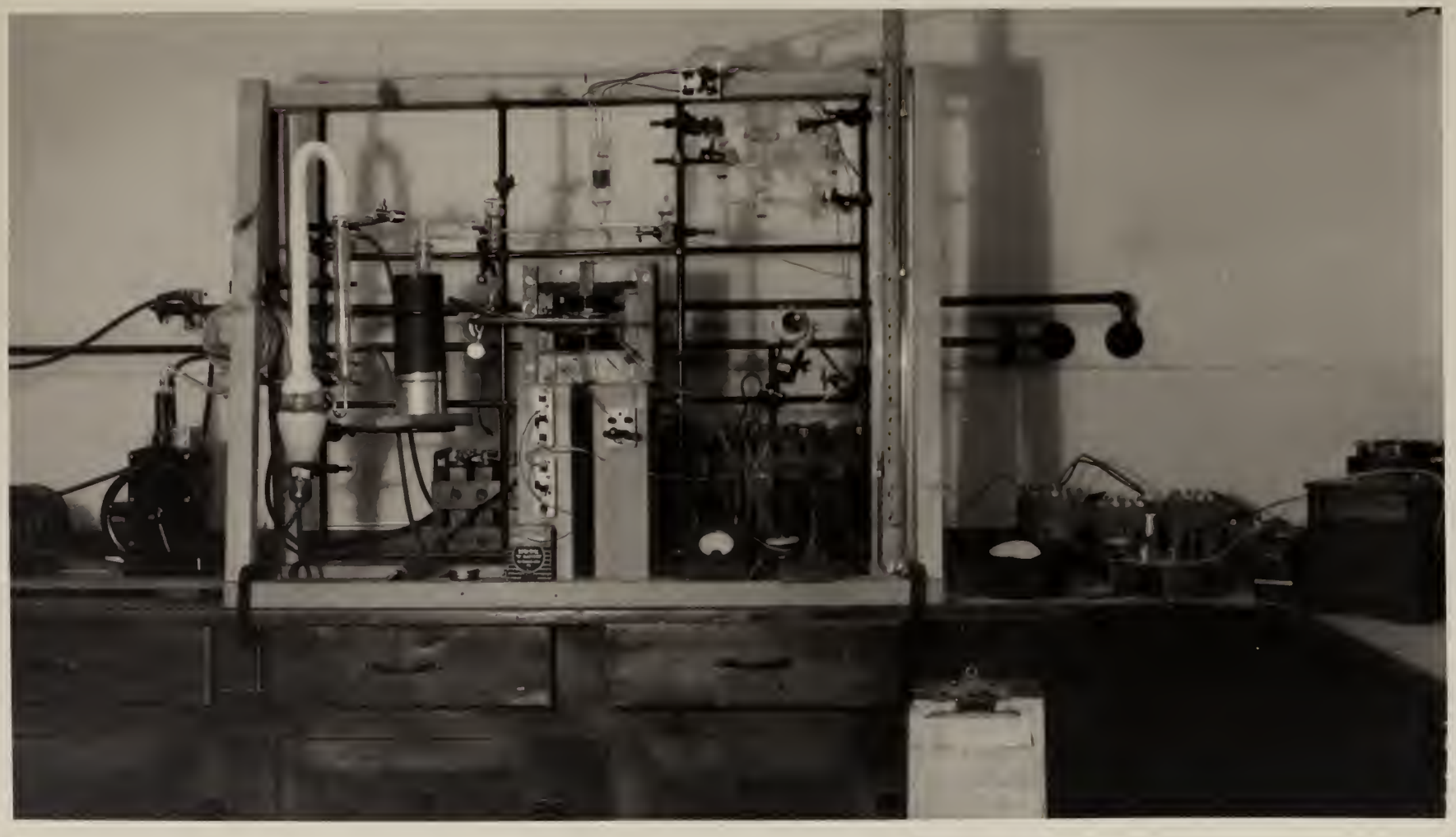

FIG. 26. Photograph of Experimental Laboratory Gas Detection System

would have been a portable unit and even could have been mounted on wheels. The use of a multistage, air-cooled oil diffusion pump would eliminate the need for a source of cooling water and a freezing-out trap. The use of a heavy duty rectifier to obtain up to five amperes of filtered direct current from the line voltage would eliminate the need for Edison cells. The gas detection system would then be a single, portable unit requiring only ordinary line voltage for operation.

V. SUMMARY AND CONCLUSIONS

A. Synopsis of Important Findings

1. Theoretical Considerations

A radial magnetic field, either steady or time varying, appeared to be an essential component of an electronic gas detection system. It was found that the distribution of field strength in a radial, non-uniform magnetic field was a function of the shape of the pole caps and could be calculated. It was further found that the strength of such a field varied linearly with magnetic coil current.

The big decision to be made in the design of an Ion Centrifuge appeared to be a choice between a direct current ion flow, steady field centrifuge and a velocity modulated ion flow, time varying field centrifuge. In the former instance, semicircular ionic orbits were sufficient for measurement purposes, whereas completely circular ionic orbits were necessary in the latter case. Regardless of which design was chosen, positive ions had to be created and accelerated within the magnetic field.

A continuously operating centrifuge using a porous plug seemed feasible for the detection of carbon monoxide in the air but wholly unsuitable for general gas analysis which must be an intermittent process. The weight and bulkiness of the magnetic circuit as well as the complexity

and excessive cost of high vacuum and detection equipment made the system unsuitable for home use.

2. Experimental Considerations

After about one year of work in the laboratory with the actual equipment to be used in an electronic gas detection system, several truths became evident:

The electronic circuits, the magnetic circuit, and the centrifuge tube itself were all practicable and capable of being developed to a high degree of simplicity and dependability. The one obstacle to a simple, compact gas alarm system turned out to be the high vacuum requirement. With even the fastest pumping system, it still would take an appreciable time to convert atmospheric pressure within the centrifuge to high vacuum. In making an accurate, general analysis, one should start out with a clean "crucible" so to speak. Gas adsorbed on the inner walls and electrodes of the centrifuge and not removed would falsify qualitative and quantitative readings.

The one chief advantage of electronic gas detection was to have been speed, but speed and accuracy are mutually exclusive attributes of a device which becomes more accurate as time and pumping progress. In view of these facts, a general gas detection system as conceived and presented in this thesis is properly a laboratory system where the factor of time is not important.

B. Recommendations for Further Study

In spite of two chief obstacles, the complexity and time delay inherent in high vacuum systems and the bulkiness of magnetic circuits, the writer sincerely believes that further study and experimentation can overcome the difficulties of creating a practical electronic gas detection

system. The way to beat the high vacuum problem is to develop and perfect a Torricellian high vacuum system in which mercury or some other liquid is used to free the centrifuge tube of gas molecules. A Torricellian vacuum at room temperature is about 10^{-3} millimeters of mercury due to the vapor pressure of the mercury. A bit of cooling should reduce this to a good high vacuum. The magnetic circuit can be reduced in size and weight by building a smaller centrifuge tube, using high permeability materials, and pulsing magnetic coil current to achieve high values of current for short time intervals with low average coil heating.

ABSTRACT OF THE THESIS

The major objective of the investigator was to create and develop a fundamental electronic process for rapid gas detection and determination. Among other limitations imposed on the investigation was the arbitrary restriction of the study to the detection and determination of one gas, carbon monoxide. A brief description of the occurrences, properties, and methods of detecting carbon monoxide served to acquaint the reader with present methods of gas detection, both chemical and physical, and impress him with the need for a dependable, fast, accurate gas detector. The electronic approach to the problem would make use of two physical properties of a gas, its molecular mass and its ionization potential. Such a system would not be confined to the determination of carbon monoxide in the air, but could be extended to general gas analysis.

The theoretical procedure employed to create the desired electronic gas detection system was one of postulation, mathematical confirmation, and experimental verification. Throughout the work, the engineering point of view was dominant; that is, the practicability of actual construction was ever kept in mind.

The fundamental electronic process proposed as a basis for general gas analysis, both qualitative and quantitative, was a mass spectrometric separation of gas molecules. It was planned to design a new electron tube to be known as an Ion Centrifuge. Air to be tested would be admitted to the centrifuge and the pressure within the tube reduced to a very low value by a high vacuum system. A thermionically heated cathode within the tube would bombard gas molecules with electrons, selectively ionizing any molecules which might have the same mass but different ionization potentials. Positive ions so created would then be whirled about in either an electric or a magnetic field so designed as to make the ions

move in circles or semicircles. The radii of these orbits would depend on the masses of the ions. An electrical pickup probe would be employed within the tube to detect the variety and concentrations of ions.

The first centrifuge tube to be postulated was the electrostatic Ion Centrifuge in which two different superimposed electric fields were intended to effect separation of ions. One of the fields was a stationary, non-uniform, radial field, and the other was a uniform, rotating field. The function of the rotating field was to supply a tangential component of force to make the ions rotate in circular paths, while the non-uniform, radial field acted as the electrical equivalent of a spring to balance the centrifugal reaction of the rotating ions. Heavy ions were to rotate at a greater distance from the center of the tube than light ions; in fact, there was to have been a linear relationship between the mass of an ion and the radius of its orbit. Mathematical derivations of the differential equations of ion motion in such a centrifuge and the subsequent solution of these equations proved conclusively that it would not operate as desired. Other considerations, especially the difficulty of creating the proper type of radial field, also revealed the impracticability of such a tube. In spite of this, the hypothetical electrostatic centrifuge served as the nucleus about which all the components of a complete electronic gas detection system could be built and studied.

It was realized early in the work that a good high vacuum of the order of 10^{-5} to 10^{-6} millimeters of mercury would be required within the centrifuge tube to permit free movement of positive ions. This degree of vacuum could be conventionally attained only by means of a complex, multiple pump system. For experimental testing and calibration of an Ion Centrifuge, special apparatus was designed that would generate

carbon monoxide and mix it in any desired proportion with any number of other gases. Necessary electronic circuits were devised for control and measurement purposes, and a regular routine was established for electronically analyzing gas mixtures.

When it had been definitely determined that the electrostatic centrifuge tube would not operate as desired, a magnetic Ion Centrifuge tube was postulated. This tube could take one of two forms: It could be a toroid-shaped affair in which positive ions moved in circular orbits, their motion being velocity modulated by a time varying magnetic field; or it could be a U or D shaped arrangement in which ions moved in semicircular paths to constitute a direct current flow. Because of its simplicity, the latter type of magnetic Ion Centrifuge was mathematically investigated and found to be feasible. It was further found that a special type of radial, non-uniform magnetic field was required, and that positive ions had to be created and accelerated within this field. Through the use of a mathematical technique of infinitely thin cylindrical sections, it was possible to calculate the shape of magnetic pole faces to give the required field. Experimental results verified the validity of the mathematics and broach the possibility of refining and enlarging this technique as a contribution to magnetic field theory.

An entire experimental gas detection system was actually constructed and studied in the laboratory for a period of about one year. The chief obstacle of electronic gas detection was found to be the need for a high vacuum. The electronic circuits, the magnetic circuit, and the Ion Centrifuge tube itself were all practicable and capable of being developed to a high degree of simplicity and dependability. The complexity, and especially the time delay inherent in the vacuum pumping process, of

the high vacuum system would confine electronic gas analysis to the laboratory. It was recommended that further study be conducted to develop a Torricellian type of high vacuum system and a magnetic circuit utilizing pulsed coil current to obtain high magnetic fields for short time intervals.

BIBLIOGRAPHY

Attwood, Stephen S., Electric and Magnetic Fields. New York: John Wiley and Sons, Inc., 1941. 430 pp.

Berger, L. B. and Schrenk, H. H., "Methods for the Detection and Determination of Carbon Monoxide", U.S. Dept. of the Interior Bureau of Mines Technical Paper 582. Washington, D. C.: U.S. Government Printing Office, 1938. 30 pp.

Compton, Karl T., Critical Potentials, National Research Council Bulletin Vol. 9, No. 48. Washington, D. C.: U.S. Government Printing Office, 1924. 135 pp.

Dushman, Saul, Production and Measurement of High Vacuum. Schenectady, N. Y.: General Electric Review, 1922. 239 pp.

Electrical Engineering Staff, M.I.T., Magnetic Circuits and Transformers. New York: John Wiley and Sons, Inc., 1943. 718 pp.

Ficklen, Joseph B., Manual of Industrial Health Hazards. Hartford, Conn.: Service to Industry, Box 133, West Hartford, Conn., 1940. 176 pp.

Fink, Donald G., Engineering Electronics. New York: McGraw Hill Book Co., Inc., 1938. 358 pp.

Handbook of Chemistry and Physics, Twenty-seventh edition. Cleveland, Ohio: Chemical Rubber Publishing Co., 1943. 2553 pp.

Heldman, Julius David, Techniques of Glass Manipulation in Scientific Research. New York: Prentice Hall, Inc., 1946. 132 pp.

Henney, Keith, Electron Tubes in Industry. New York: McGraw Hill Book Co., Inc., 1937. 539 pp.

Kerst, D. W., "Acceleration of Electrons by Magnetic Induction", The Physical Review, 60:47-58, July, 1941

Markus, John and Zeluff, Vin, Handbook of Industrial Electronic Circuits. New York: McGraw Hill Book Co., Inc., 1948. 272 pp.

McCulloch, A., Gas Analysis. London: H. F. and G. Witherby, Ltd., 1938. 166 pp.

Myers, L. M., Electron Optics Theoretical and Practical. New York: D. Van Nostrand Co., Inc., 1939. 618 pp.

Radar School Staff, M.I.T., Principles of Radar, Second edition. New York: McGraw Hill Book Co., Inc., 1946. 12 chapters.

R.C.A. Receiving Tube Manual, Technical Series RC 15. Harrison, N.J.: Tube Dept., Radio Corp. of America, 1949. 256 pp.

Roters, Herbert C., Electromagnetic Devices. New York: John Wiley and Sons, Inc., 1941. 561 pp.

Ruhemann, M., Separation of Gases. Oxford: The Clarendon Press, 1940. 283 pp.

Schlesinger, H. I., General Chemistry. New York: Longmans, Green and Co., 1938. 857 pp.

Smith, Ed Sinclair, Automatic Control Engineering. New York: McGraw Hill Book Co., Inc., 1944. 367 pp.

Strong, John, Procedures in Experimental Physics. New York: Prentice-Hall, Inc., 1938. 642 pp.

Wright, Robert Hamilton, Manual of Laboratory Glassblowing. Brooklyn, N.Y.: Chemical Publishing Co., Inc., 1943. 90 pp.

Zworykin, V. K. and Morton, G. A., Television. New York: John Wiley and Sons, Inc., 1940. 646 pp.

BOSTON UNIVERSITY
1 1719 02565 1177